ELCON · elcon.im

DWG. NO 도면번호 HE000501 1/2

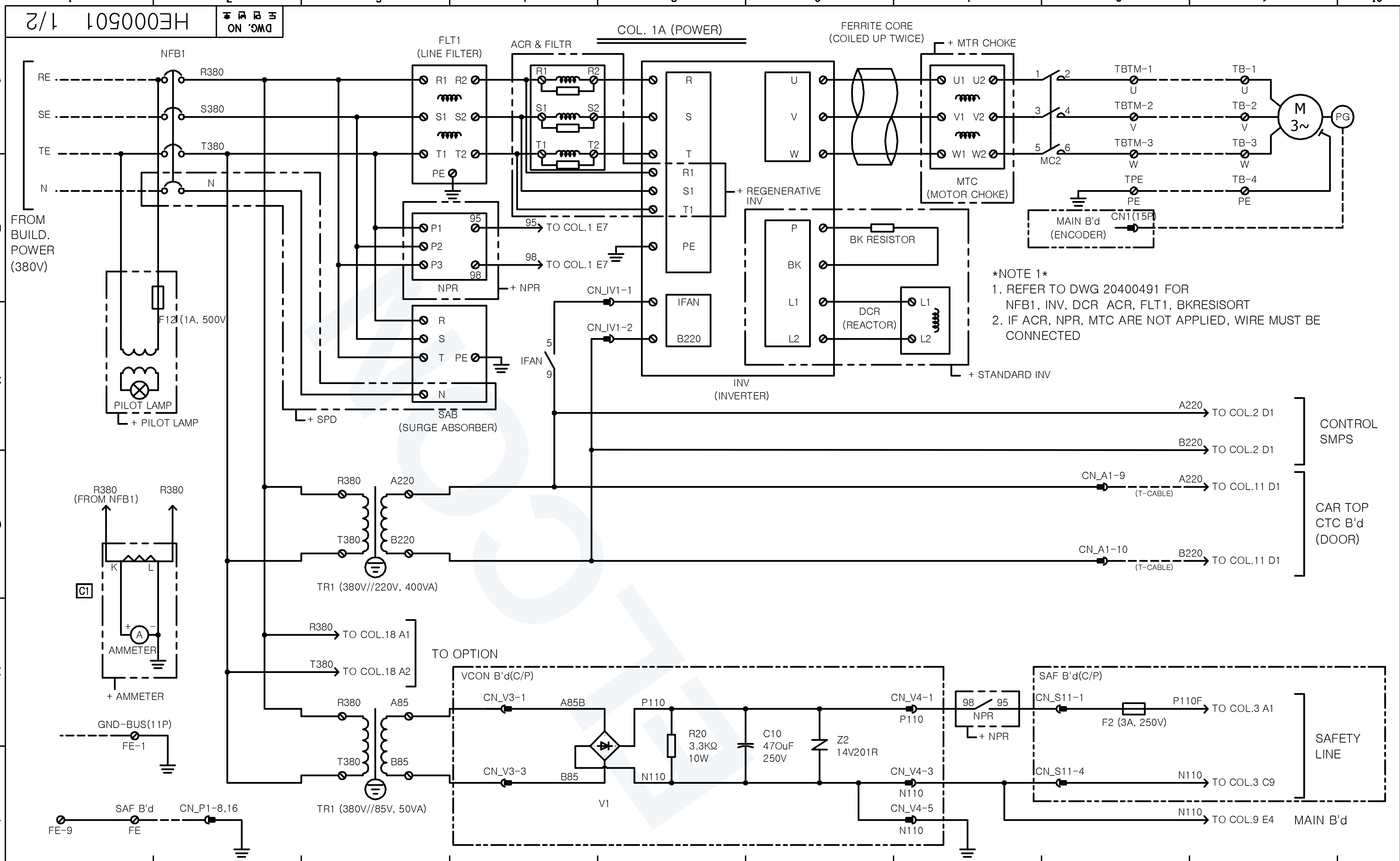

THIS DRAWING IS PROPRIETARY TO HELCO
NO PART OF THIS DRAWING MAY BE REPRODUCED
WITHOUT THE PERMISSION OF HELCO
허가없이 복사할 수 없음

CHANGE 개정란		
A1	COMPLETELY REVISED	2013. 04. 17 진호연
B1	CHANGE PIN CN_V3-2 -> 3, CN_V4-2 -> 3, CN_V4-3 -> 5	2013. 04. 25 진호연
C1	MOVED CT POSITION	2013. 05. 06 진호연

TOLERANCES-UNLESS OTHERWISE SPECIFIED

SIZE OVER	TO INCL.	TURN. PNCH'G DIST.OF HOLE STR.	MLDG. DIE CSTG. PRCN.CSTG DRAW.	SH.MET WELD GAS CTG.	CSTG. FORG.
1	4	± 0.1	± 0.2	± 0.3	± 0.5
4	16	± 0.2	± 0.3	± 0.5	± 0.7
16	63	± 0.3	± 0.4	± 0.7	± 0.9
63	250	± 0.4	± 0.6	± 1.2	± 1.3
250	500	± 0.6	± 0.8	± 1.5	± 1.8
500	1000	± 0.8	± 1.0	± 2.0	± 2.5
1000	2000	± 1.1	± 1.5	± 2.5	± 3.3
ANGLE		± 0.25°	± 0.5°	± 1.0°	± 2.0°

HYUNDAI ELEVATOR CO., LTD.

	DRWN BY 제 도	DSND BY 설 계	CHKD BY 검 토	APPD BY 승 인
표 준 / 임 시 / 보 류	진 호 연		김주찬	심영석
	2012. 12. 03		01/31	01/31

UNIT 단위	MM
SCALE 척도	N/S
3RD ANGLE 3 각 법	
REF. NO 참고도면	
APPAR.	WBST1 & WBLX1
TITLE 제 목	ELEM.W.DIAGRAM
DWG. NO 도면번호	HE000501 1/2

ELCON · elcon.im

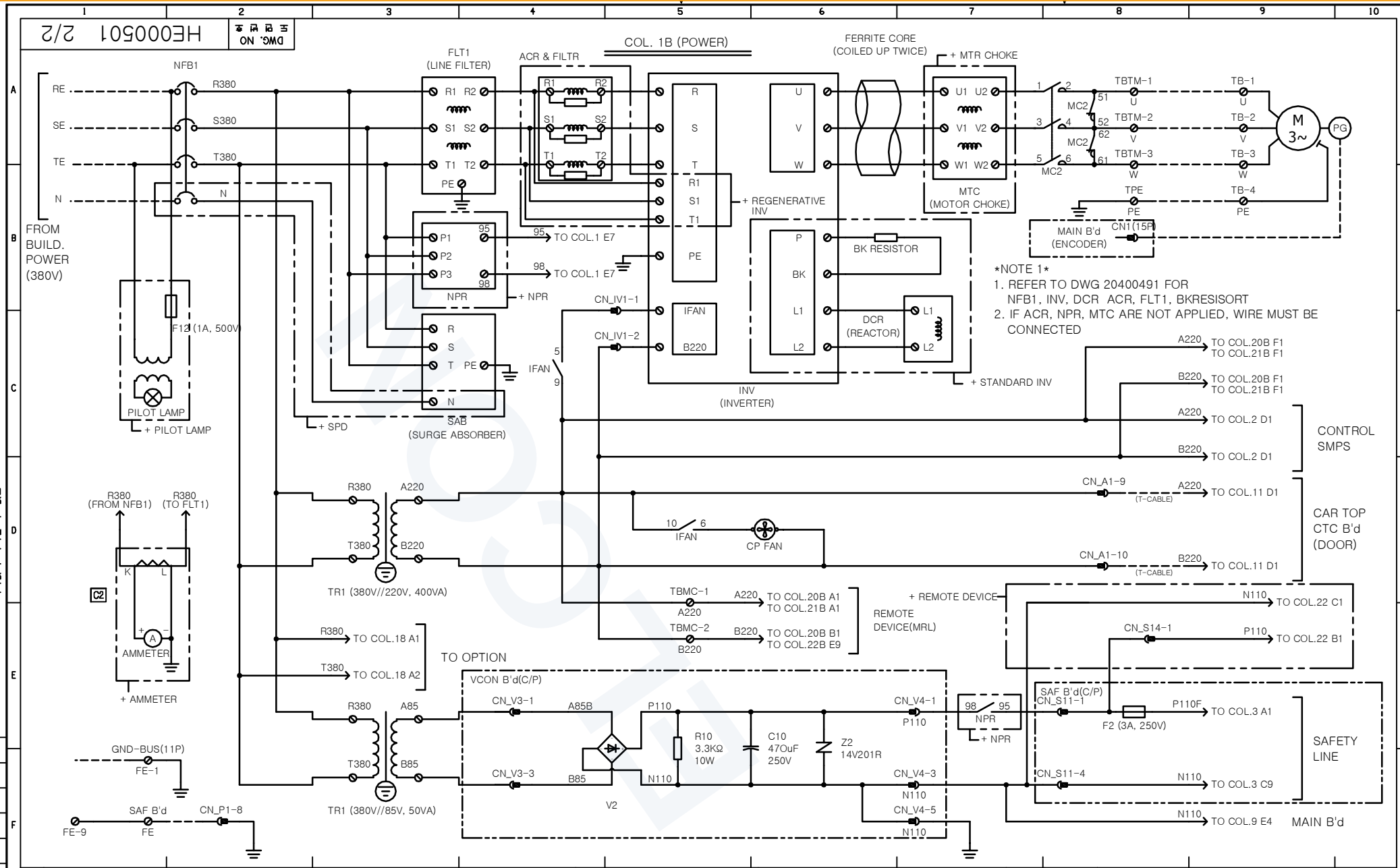

THIS DRAWING IS PROPRIETARY TO HELCO
NO PART OF THIS DRAWING MAY BE REPRODUCED
WITHOUT THE PERMISSION OF HELCO
허가없이 복사할 수 없음

배부처	

CHANGE 개정란		
A1	COMPLETELY REVISED	2013. 04. 17 진 호 연
B1	CHANGE PIN CN_V3-2 -> 3, CN_V4-2 -> 3, CN_V4-3 -> 5	2013. 04. 25 진 호 연
C1	ADDED CP FAN	
C2	MOVED CT POSITION	2013. 05. 06 진 호 연

TOLERANCES-UNLESS OTHERWISE SPECIFIED

SIZE (OVER / TO INCL.)	TURN. PNCH'G DIST.OF HOLE STR.	MLDG. DIE CSTG. PRCN.CSTG DRAW.	SH.MET WELD GAS CTG.	CSTG. FORG.
1 / 4	± 0.1	± 0.2	± 0.3	± 0.5
4 / 16	± 0.2	± 0.3	± 0.5	± 0.7
16 / 63	± 0.3	± 0.4	± 0.7	± 0.9
63 / 250	± 0.4	± 0.6	± 1.2	± 1.3
250 / 500	± 0.6	± 0.8	± 1.5	± 1.8
500 / 1000	± 0.8	± 1.0	± 2.0	± 2.5
1000 / 2000	± 1.1	± 1.5	± 2.5	± 3.3
ANGLE	± 0.25°	± 0.5°	± 1.0°	± 2.0°

HYUNDAI ELEVATOR CO., LTD.

	DRWN BY 제 도	DSND BY 실 계	CHKD BY 검 토	APPD BY 승 인
표 준 / 임 시 / 보 류	진 호 연		김주찬	심영석
	2012. 12. 03		01/31	01/31

UNIT 단위	MM	APPAR.	WBSS1
SCALE 척도	N/S	TITLE 제 목	ELEM.W.DIAGRAM
3RD ANGLE 3 각 법			
REF. NO 참고도면		DWG. NO 도면번호	HE000501 2/2

DWG. NO 도면번호 HE000501 2/2

HDW-91-003A

A3 (420mmx297MM)

ELCON · elcon.im

ELCON · elcon.im

DWG. NO 도면번호 HE000502 1/2

COL. 2A (POWER)

FROM BUILD. POWER (220V)
NFB2
FLT2 (IN 1, 2, E; OUT 3, 4)
F4 (5A, 250V)
RCT1(220V)
CN_A1-11 22X → TO COL.11 D1 (T-CABLE)
CN_A1-12 22Y → TO COL.11 E1 (T-CABLE)
CN_A3-4 22X, CN_P1-19 22X
CN_A3-5 22Y, CN_P1-20 22Y
PIT LAMP S/W
PIT LAMP
RCT3(220V)
EMPS B'd CAR J. BOX (CTC B'd)
220X → TO COL.18 A6
220Y → TO COL.18 A6
TO OPTION

INPUT AC220V (L, N, E) / OUTPUT DC 24V (V+, V-)
PS1 AC220V/DC24V (FUSE 250V, T4AH)
TO COL.1 C9 A220
TO COL.1 C9 B220
P24 → TO COL.5 E1
N24 → TO COL.5 D1
TBPW-1 P24
TBPW-4 N24
TBPW-2 P24
TBPW-5 N24
TBPW-3 P24
TBPW-6 N24
F1 (3A, 250V)

MAIN B'd
P24 → TO COL.9 F4
N24 → TO COL.9 F4

CONTROL (SAF B'd)
CN_S11-6 P24 → TO COL.3 E1 (SAF B'd)
CN_S11-3 B1 N24 → TO COL.3 E6 (SAF B'd)

HALL INDICATOR
- GIA
CN_A2-1 P24 → TO COL.15 A1
CN_A2-2 N24 → TO COL.15 A1
CN_A2-3 FE → TO COL.15 A1

PIT BOX
+ CAR BK
P24 → TO COL.5 E1
N24 → TO COL.5 D1
CN_A3-1 CN_P1-9 P24
CN_A3-2 CN_P1-10 N24

COP PANEL (COP B'd) CAR J. BOX (CTC B'd)
CN_A1-6 P24F → TO COL.11 C1 (T-CABLE)
CN_A1-7 N24 → TO COL.11 D1 (T-CABLE)

GROUP
+ GROUP BOARD
TBMB-3 GP24 (1N5408) → TO COL.17
TBMB-4 GN24 (1N5408) → TO COL.17

SAF B'd
FE-9 CN_S6-2 FE → LANDING DOOR
CN_S7-2 FE → LANDING DOOR
FE-15 (T-CABLE) FE → TO COL.11 F1

THIS DRAWING IS PROPRIETARY TO HELCO
NO PART OF THIS DRAWING MAY BE REPRODUCED
WITHOUT THE PERMISSION OF HELCO
허가없이 복사할 수 없음

변경	내용	년월일
A1	COMPLETELY REVISED	2013. 04. 17 진 호 연
B1	WAS CN_S11-5	
B2	ADDED GIA OPTION	
B3	ADDED CAR BK OPTION	2013. 04. 25 진 호 연

TOLERANCES—UNLESS OTHERWISE SPECIFIED

SIZE OVER	SIZE TO INCL.	TURN. PNCH'G DIST.OF HOLE STR.	MLDG. DIE CSTG. PRCN.CSTG DRAW.	SH.MET WELD GAS CTG.	CSTG. FORG.
1	4	± 0.1	± 0.2	± 0.3	± 0.5
4	16	± 0.2	± 0.3	± 0.5	± 0.7
16	63	± 0.3	± 0.4	± 0.7	± 0.9
63	250	± 0.4	± 0.6	± 1.2	± 1.3
250	500	± 0.6	± 0.8	± 1.5	± 1.8
500	1000	± 0.8	± 1.0	± 2.0	± 2.5
1000	2000	± 1.1	± 1.5	± 2.5	± 3.3
ANGLE		± 0.25°	± 0.5°	± 1.0°	± 2.0°

HYUNDAI ELEVATOR CO., LTD.

	DRWN BY 제 도	DSND BY 설 계	CHKD BY 검 토	APPD BY 승 인
표 준				
임 시	진 호 연		김주찬	심영석
보 류				
	2012. 12. 03		01/31	01/31

UNIT 단위	MM	APPAR.	WBST1 & WBLX1
SCALE 척도	N/S	TITLE 제 목	ELEM.W.DIAGRAM
3RD ANGLE 3 각 법			
REF. NO 참고도면		DWG. NO 도면번호	HE000502 1/2

HDW-91-003A A3 (420mmx297MM)

ELCON · elcon.im

ELCON · elcon.im

DWG. NO 도면번호 HE000502 2/2

COL. 2B (POWER)

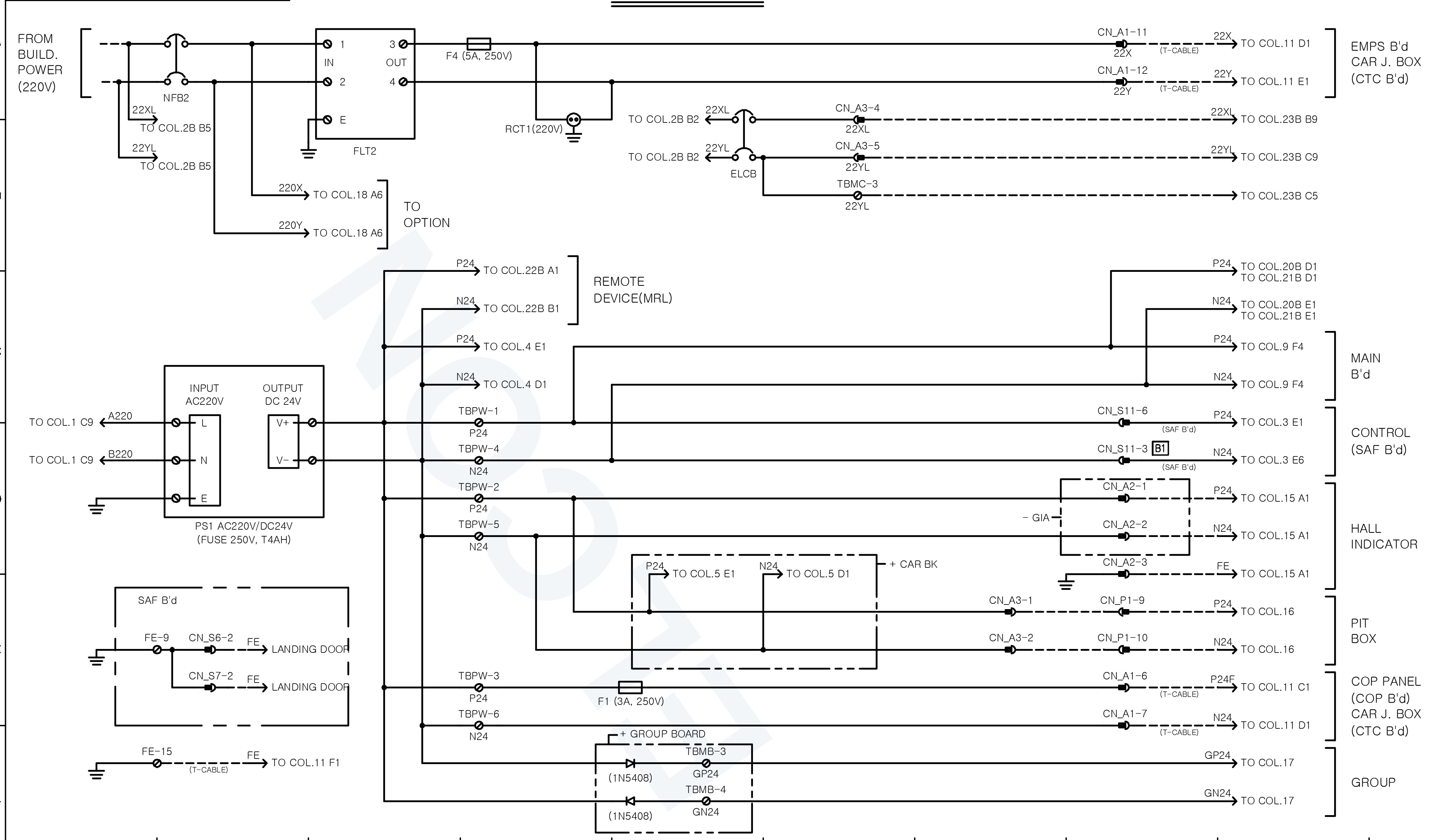

THIS DRAWING IS PROPRIETARY TO HELCO
NO PART OF THIS DRAWING MAY BE REPRODUCED
WITHOUT THE PERMISSION OF HELCO
허가없이 복사할 수 없음

배부처

CHANGE 개정란		
A1	2013. 04. 17 진 호 연	COMPLETELY REVISED
B1 B2 B3	2013. 04. 25 진 호 연	WAS CN_S11-5 ADDED GIA OPTION ADDED CAR BK OPTION
B		

TOLERANCES-UNLESS OTHERWISE SPECIFIED

SIZE OVER	TO INCL.	TURN. PNCH'G DIST.OF HOLE STR.	MLDG. DIE CSTG. PRCN.CSTG DRAW.	SH.MET WELD GAS CTG.	CSTG. FORG.
1	4	± 0.1	± 0.2	± 0.3	± 0.5
4	16	± 0.2	± 0.3	± 0.5	± 0.7
16	63	± 0.3	± 0.4	± 0.7	± 0.9
63	250	± 0.4	± 0.6	± 1.2	± 1.3
250	500	± 0.6	± 0.8	± 1.5	± 1.8
500	1000	± 0.8	± 1.0	± 2.0	± 2.5
1000	2000	± 1.1	± 1.5	± 2.5	± 3.3
ANGLE		± 0.25°	± 0.5°	± 1.0°	± 2.0°

HYUNDAI ELEVATOR CO., LTD.

표 준	DRWN BY 제 도	DSND BY 설 계	CHKD BY 검 토	APPD BY 승 인
임 시	진 호 연		김주찬	심영석
보 류	2012. 12. 03		01/31	01/31

UNIT 단위	MM	APPAR.	WBSS1
SCALE 척도	N/S	TITLE 제 목	ELEM.W.DIAGRAM
3RD ANGLE 3 각 법			
REF. NO 참고도면		DWG. NO 도면번호	HE000502 2/2

ELCON · elcon.im

ELCON · elcon.im

DWG. NO 도면번호 HE000503 1/2

COL. 3A (SAFETY)

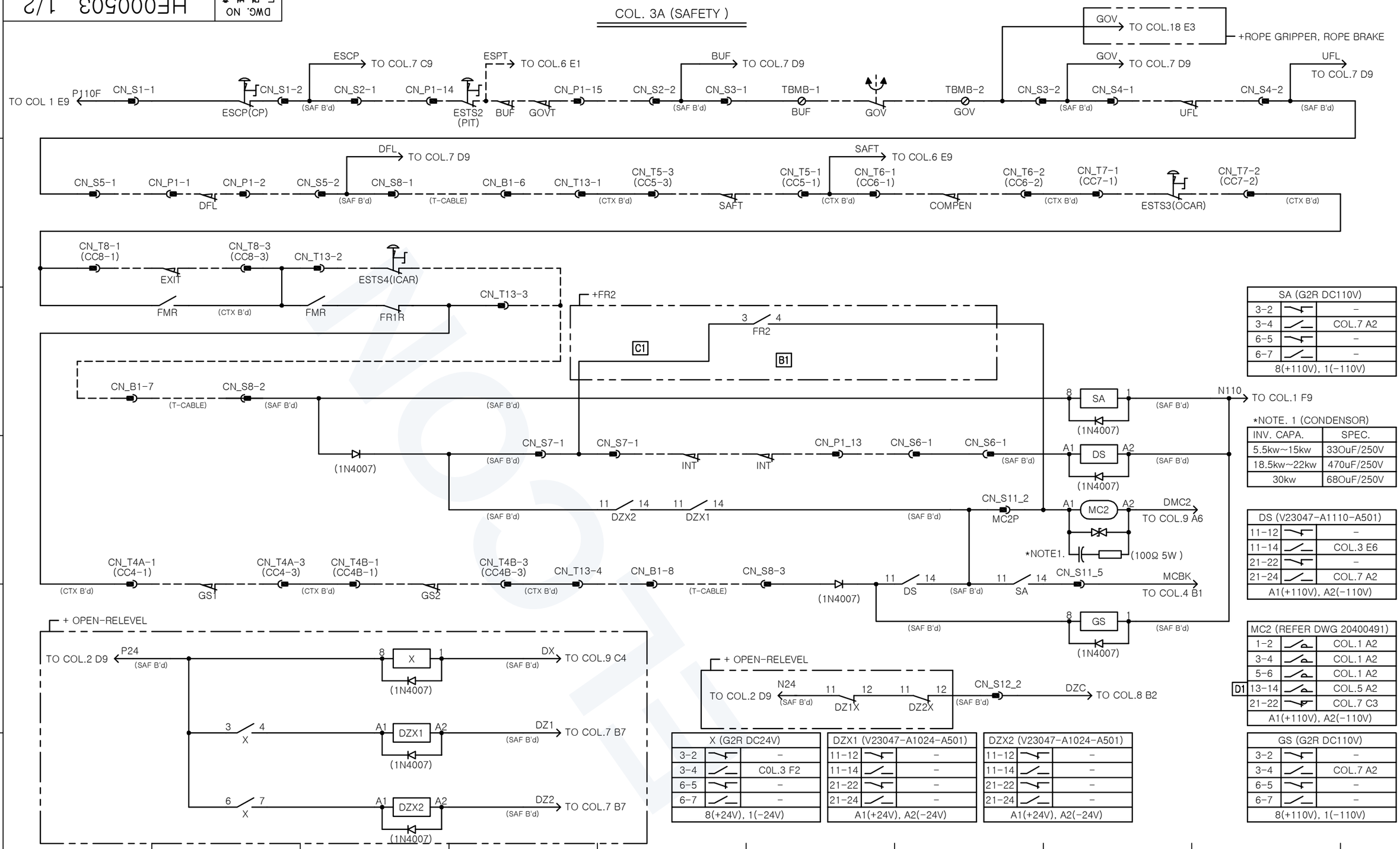

SA (G2R DC110V)		
3-2		-
3-4		COL.7 A2
6-5		-
6-7		-
8(+110V), 1(-110V)		

*NOTE. 1 (CONDENSOR)

INV. CAPA.	SPEC.
5.5kw~15kw	33OuF/250V
18.5kw~22kw	470uF/250V
30kw	68OuF/250V

DS (V23047-A1110-A501)		
11-12		-
11-14		COL.3 E6
21-22		-
21-24		COL.7 A2
A1(+110V), A2(-110V)		

MC2 (REFER DWG 20400491)		
1-2		COL.1 A2
3-4		COL.1 A2
5-6		COL.1 A2
D1 13-14		COL.5 A2
21-22		COL.7 C3
A1(+110V), A2(-110V)		

GS (G2R DC110V)		
3-2		-
3-4		COL.7 A2
6-5		-
6-7		-
8(+110V), 1(-110V)		

X (G2R DC24V)		
3-2		-
3-4		COL.3 F2
6-5		-
6-7		-
8(+24V), 1(-24V)		

DZX1 (V23047-A1024-A501)		
11-12		-
11-14		-
21-22		-
21-24		-
A1(+24V), A2(-24V)		

DZX2 (V23047-A1024-A501)		
11-12		-
11-14		-
21-22		-
21-24		-
A1(+24V), A2(-24V)		

CHANGE 개정란		
A1	COMPLETELY REVISED	2013. 04. 17 진 호 연 A
B1	REMOVED WIRING	2013. 04. 23 진 호 연 B
B2	ADDED CONNECTOR NAME (CC4,4B,5,6,7,8)	
C1	REMOVED CN_S7A	2013. 05. 07 진 호 연 C
D1	WAS COL4. C2	2013. 05. 13 진 호 연 D

TOLERANCES—UNLESS OTHERWISE SPECIFIED

SIZE OVER	SIZE TO INCL.	WORK TURN. PNCH'G DIST.OF HOLE STR.	MLDG. DIE CSTG. PRCN.CSTG DRAW.	SH.MET WELD GAS CTG.	CSTG. FORG.
1	4	± 0.1	± 0.2	± 0.3	± 0.5
4	16	± 0.2	± 0.3	± 0.5	± 0.7
16	63	± 0.3	± 0.4	± 0.7	± 0.9
63	250	± 0.4	± 0.6	± 1.2	± 1.3
250	500	± 0.6	± 0.8	± 1.5	± 1.8
500	1000	± 0.8	± 1.0	± 2.0	± 2.5
1000	2000	± 1.1	± 1.5	± 2.5	± 3.3
ANGLE		± 0.25°	± 0.5°	± 1.0°	± 2.0°

HYUNDAI ELEVATOR CO., LTD.

	DRWN BY 제 도	DSND BY 설 계	CHKD BY 검 토	APPD BY 승 인
표 준	진 호 연		김주찬	심영석
임 시				
보 류				
	2012. 12. 03		01/31	01/31

UNIT 단위	MM	APPAR.	WBST1 & WBLX1
SCALE 척도	N/S	TITLE 제 목	ELEM.W.DIAGRAM
3RD ANGLE 3 각 법			
REF. NO 참고도면		DWG. NO 도면번호	HE000503 1/2

배 부 처

THIS DRAWING IS PROPRIETARY TO HELCO
NO PART OF THIS DRAWING MAY BE REPRODUCED
WITHOUT THE PERMISSION OF HELCO
허가없이 복사할 수 없음

HDW-91-003A

A3 (420mmx297MM)

ELCON · elcon.im

ELCON · elcon.im

DWG. NO 도면번호 HE000503 2/2

COL. 3B (SAFETY)

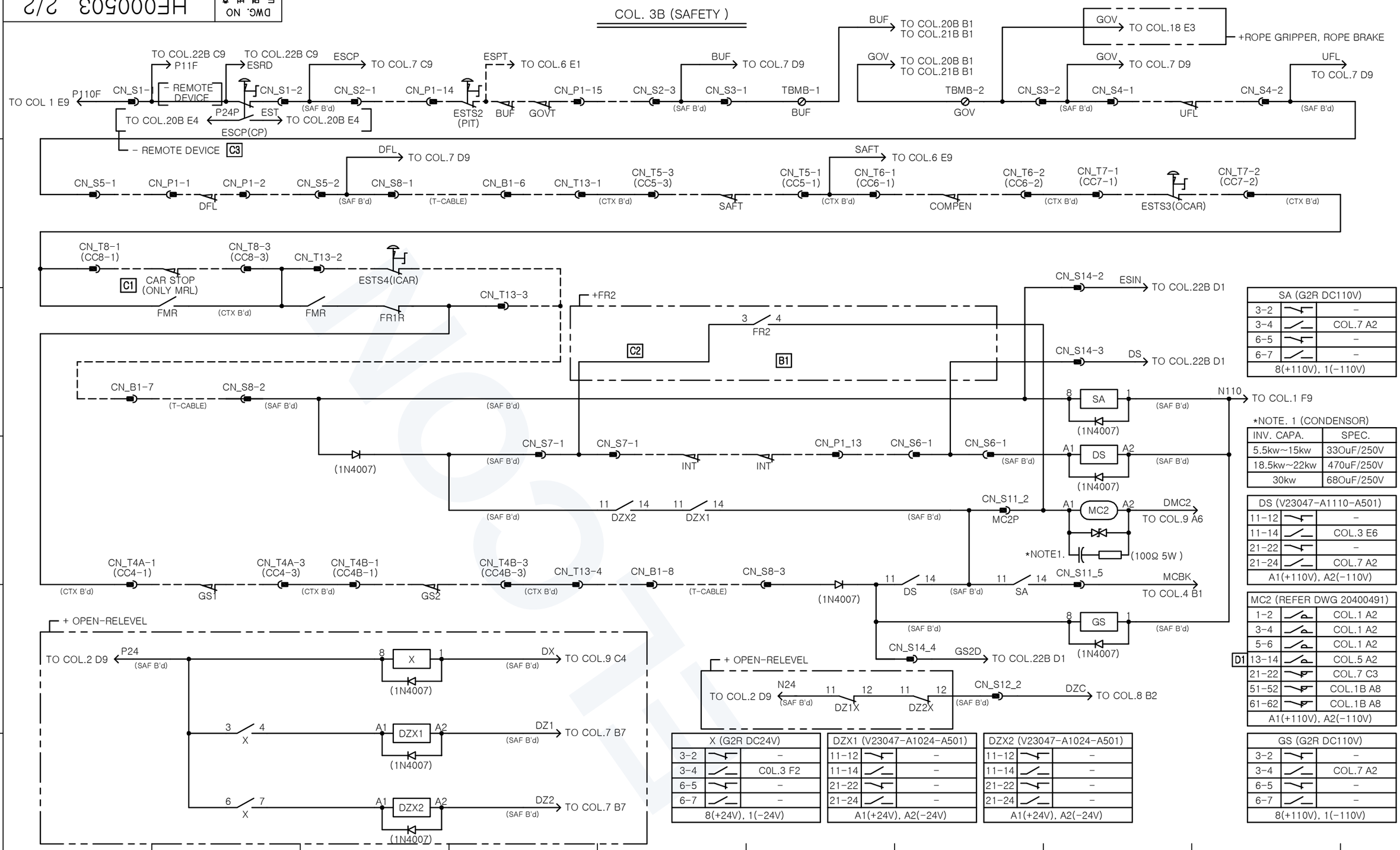

SA (G2R DC110V)		
3-2		-
3-4		COL.7 A2
6-5		-
6-7		-
8(+110V), 1(-110V)		

*NOTE. 1 (CONDENSOR)

INV. CAPA.	SPEC.
5.5kw~15kw	33OuF/250V
18.5kw~22kw	470uF/250V
30kw	68OuF/250V

DS (V23047-A1110-A501)		
11-12		-
11-14		COL.3 E6
21-22		-
21-24		COL.7 A2
A1(+110V), A2(-110V)		

MC2 (REFER DWG 20400491)		
1-2		COL.1 A2
3-4		COL.1 A2
5-6		COL.1 A2
D1 13-14		COL.5 A2
21-22		COL.7 C3
51-52		COL.1B A8
61-62		COL.1B A8
A1(+110V), A2(-110V)		

GS (G2R DC110V)		
3-2		-
3-4		COL.7 A2
6-5		-
6-7		-
8(+110V), 1(-110V)		

X (G2R DC24V)		
3-2		-
3-4		C0L.3 F2
6-5		-
6-7		-
8(+24V), 1(-24V)		

DZX1 (V23047-A1024-A501)		
11-12		-
11-14		-
21-22		-
21-24		-
A1(+24V), A2(-24V)		

DZX2 (V23047-A1024-A501)		
11-12		-
11-14		-
21-22		-
21-24		-
A1(+24V), A2(-24V)		

CHANGE 개정란		
A1	COMPLETELY REVISED	2013. 04. 17 진 호 연
B1	REMOVED WIRING	2013. 04. 23 진 호 연
B2	ADDED CONNECTOR NAME (CC4,4B,5,6,7,8)	
C1	WAS EXIT	2013. 05. 07 진 호 연
C2	REMOVED CN_S7A	
C3	WAS NOT ON	
D1	WAS COL.4 C2	2013. 05. 16 진 호 연

TOLERANCES—UNLESS OTHERWISE SPECIFIED

SIZE OVER	SIZE TO INCL.	TURN. PNCH'G DIST. OF HOLE STR.	MLDG. DIE CSTG. PRCN.CSTG DRAW.	SH.MET WELD GAS CTG.	CSTG. FORG.
1	4	± 0.1	± 0.2	± 0.3	± 0.5
4	16	± 0.2	± 0.3	± 0.5	± 0.7
16	63	± 0.3	± 0.4	± 0.7	± 0.9
63	250	± 0.4	± 0.6	± 1.2	± 1.3
250	500	± 0.6	± 0.8	± 1.5	± 1.8
500	1000	± 0.8	± 1.0	± 2.0	± 2.5
1000	2000	± 1.1	± 1.5	± 2.5	± 3.3
ANGLE		± 0.25°	± 0.5°	± 1.0°	± 2.0°

HYUNDAI ELEVATOR CO., LTD.

	DRWN BY 제 도	DSND BY 설 계	CHKD BY 검 토	APPD BY 승 인
표 준	진 호 연		김주찬	심영석
임 시				
보 류				
	2012. 12. 03		01/31	01/31

UNIT 단위: MM
SCALE 척도: N/S
3RD ANGLE 3 각 법
REF. NO 참고도면

APPAR.: WBSS1
TITLE 제 목: ELEM.W.DIAGRAM
DWG. NO 도면번호: HE000503 2/2

배 부 처

THIS DRAWING IS PROPRIETARY TO HELCO
NO PART OF THIS DRAWING MAY BE REPRODUCED
WITHOUT THE PERMISSION OF HELCO
허가없이 복사할 수 없음

HDW-91-003A

A3 (420mmx297MM)

ELCON · elcon.im

DWG. NO 도면번호 HE000505 1/1

COL. 5A (VCON)

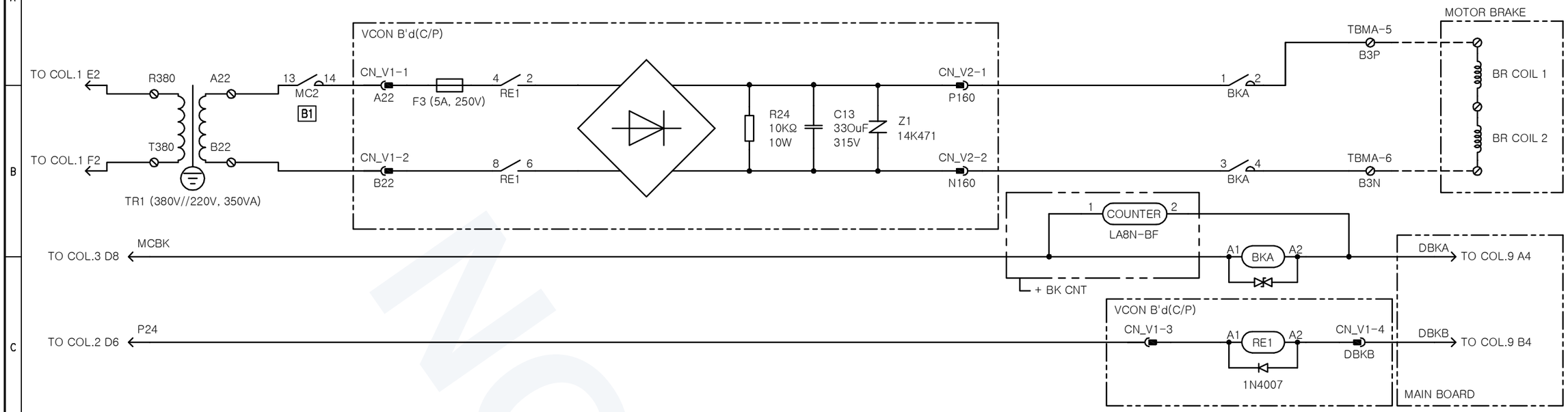

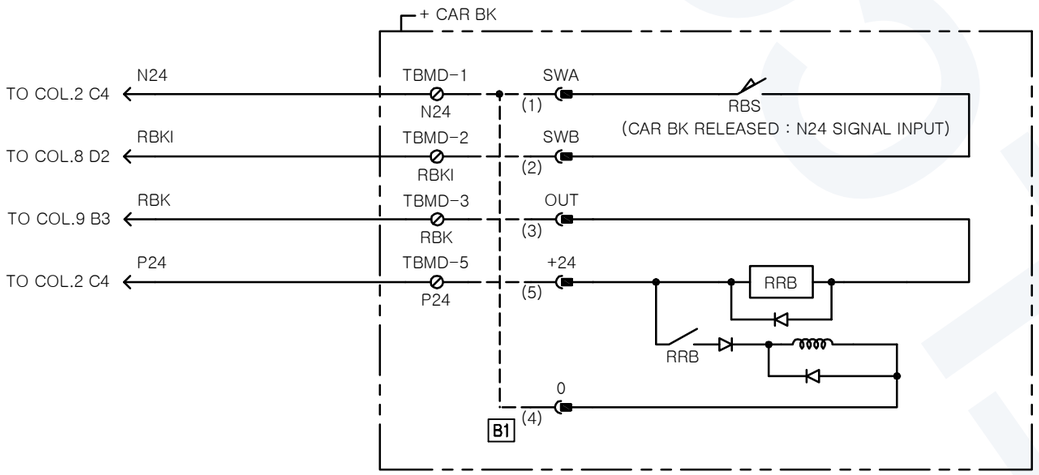

BKA (LC1D09 FD)			
1-2		COL.5 B8	D1
3-4		COL.5 B8	
5-6		-	
13-14		-	
21-22		COL.8 D3	
A1(+110V), A2(-110V)			

RE1 (T92S7D12-24)			
4-2		COL.5 B3	D1
8-6		COL.5 B3	
1(+24V), 0(-24V)			

VCON B'd(SETTING)

TM TYPE	JP1	S1	R1	SET [V]
TM750, GT17, GT25, GT50B, GT35, GT70B, GT100, GN25, GN35, GT160S, GX50, GX60, GN50, GN60 GS50		ON 1 2	UP DN	HOLDING VOLTAGE 90[V](±10%)
TM252, TM403, TM500, TM600, TM900		ON 1 2	UP DN	HOLDING VOLTAGE 60[V](±10%)

THIS DRAWING IS PROPRIETARY TO HELCO
NO PART OF THIS DRAWING MAY BE REPRODUCED
WITHOUT THE PERMISSION OF HELCO
허가없이 복사할 수 없음

배부처	

A1	COMPLETELY REVISED	2013. 04. 17	진 호 연
B1	WAS (6)	2013. 04. 22	진 호 연
C1	CHANGE SPEC. (R24, C13, Z1)	2013. 04. 22	진 호 연
D1	WAS COL.4	2013. 05. 09	진 호 연
E1	MOVED FROM C2	2013. 05. 15	진 호 연

CHANGE 개정란

TOLERANCES—UNLESS OTHERWISE SPECIFIED

WORK / SIZE OVER	TO INCL.	TURN. PNCH'G DIST.OF HOLE STR.	MLDG. DIE CSTG. PRCN.CSTG DRAW.	SH.MET WELD GAS CTG.	CSTG. FORG.
1	4	± 0.1	± 0.2	± 0.3	± 0.5
4	16	± 0.2	± 0.3	± 0.5	± 0.7
16	63	± 0.3	± 0.4	± 0.7	± 0.9
63	250	± 0.4	± 0.6	± 1.2	± 1.3
250	500	± 0.6	± 0.8	± 1.5	± 1.8
500	1000	± 0.8	± 1.0	± 2.0	± 2.5
1000	2000	± 1.1	± 1.5	± 2.5	± 3.3
ANGLE		± 0.25°	± 0.5°	± 1.0°	± 2.0°

HYUNDAI ELEVATOR CO., LTD.

	DRWN BY 제 도	DSND BY 설 계	CHKD BY 검 토	APPD BY 승 인
표 준	진 호 연		김주찬	심영석
임 시				
보 류				
	2012.	12. 03	01/31	01/31

UNIT 단위	MM	APPAR.	WBST1 & WBLX1
SCALE 척도	N/S	TITLE 제 목	ELEM.W.DIAGRAM
3RD ANGLE 3 각 법			
REF. NO 참고도면		DWG. NO 도면번호	HE000505 1/1

HDW-91-003A

A3 (420mmx297MM)

ELCON · elcon.im

DWG. NO 도면번호 HE000505 1/1

COL. 5B (VCON)

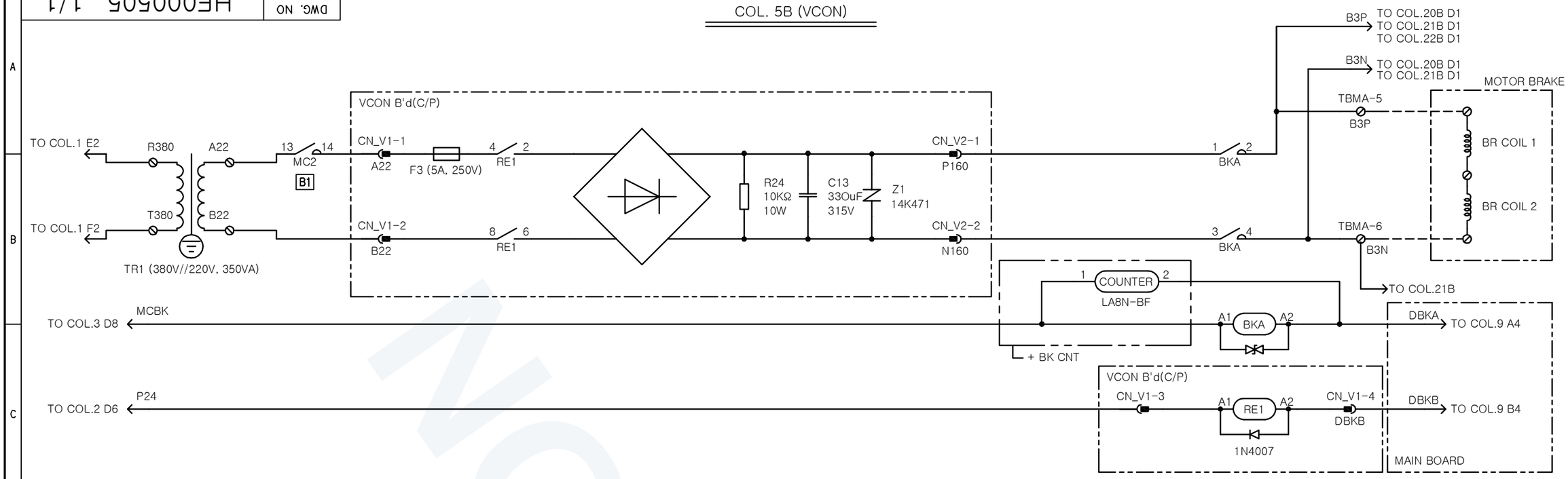

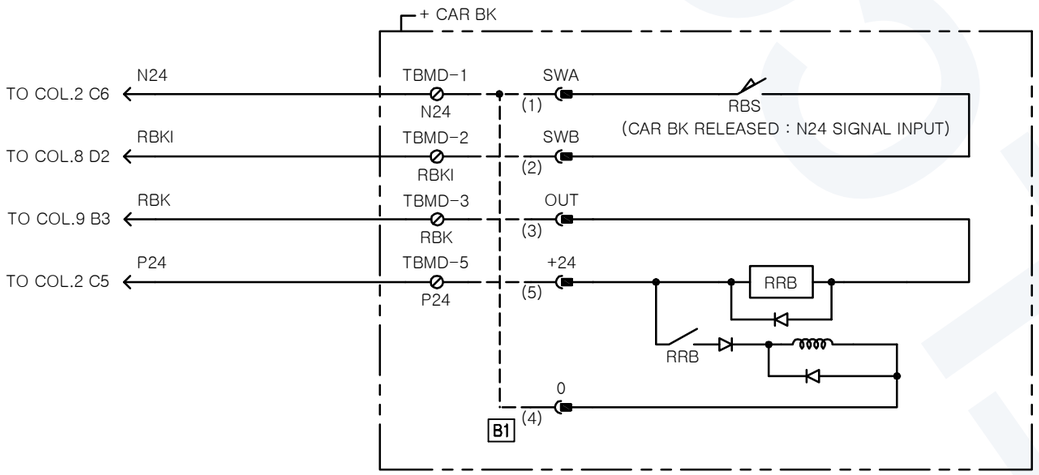

BKA (LC1D09 FD)			
1-2		COL.5 B8	D1
3-4		COL.5 B8	
5-6		-	
13-14		-	
21-22		COL.8 D3	
A1(+110V), A2(-110V)			

RE1 (T92S7D12-24)			
4-2		COL.5 B3	D1
8-6		COL.5 B4	
1(+24V), 0(-24V)			

VCON B'd(SETTING)

TM TYPE	JP1	S1	R1	SET [V]
TM750, GT17, GT25, GT50B, GT35, GT70B, GT100, GN25, GN35, GT160S, GX50, GX60, GN50, GN60 GS50		ON 1 2	UP DN	HOLDING VOLTAGE 90[V](±10%)
TM252, TM403, TM500, TM600, TM900		ON 1 2	UP DN	HOLDING VOLTAGE 60[V](±10%)

THIS DRAWING IS PROPRIETARY TO HELCO
NO PART OF THIS DRAWING MAY BE REPRODUCED
WITHOUT THE PERMISSION OF HELCO
허가없이 복사할 수 없음

배부처	

A1	COMPLETELY REVISED	2013. 04. 17 진 호 연	A
B1	WAS (6)	2013. 04. 22 진 호 연	B
C1	CHANGE SPEC. (R24, C13, Z1)	2013. 04. 22 진 호 연	C
D1	WAS COL.4	2013. 05. 09 진 호 연	D
E1	MOVED FROM C2	2013. 05. 16 진 호 연	E

CHANGE 개정란

TOLERANCES—UNLESS OTHERWISE SPECIFIED

WORK / SIZE OVER	TO INCL.	TURN. PNCH'G DIST.OF HOLE STR.	MLDG. DIE CSTG. PRCN.CSTG DRAW.	SH.MET WELD GAS CTG.	CSTG. FORG.
1	4	± 0.1	± 0.2	± 0.3	± 0.5
4	16	± 0.2	± 0.3	± 0.5	± 0.7
16	63	± 0.3	± 0.4	± 0.7	± 0.9
63	250	± 0.4	± 0.6	± 1.2	± 1.3
250	500	± 0.6	± 0.8	± 1.5	± 1.8
500	1000	± 0.8	± 1.0	± 2.0	± 2.5
1000	2000	± 1.1	± 1.5	± 2.5	± 3.3
ANGLE		± 0.25°	± 0.5°	± 1.0°	± 2.0°

HYUNDAI ELEVATOR CO., LTD.

표 준 / 임 시 / 보 류	DRWN BY 제 도	DSND BY 설 계	CHKD BY 검 토	APPD BY 승 인
	진 호 연		김주찬	심영석
	2012.	12. 03	01/31	01/31

UNIT 단위	MM	APPAR.	WBSS1
SCALE 척도	N/S	TITLE 제 목	ELEM.W.DIAGRAM
3RD ANGLE 3 각 법			
REF. NO 참고도면		DWG. NO 도면번호	HE000505 1/1

HDW-91-003A

A3 (420mmx297MM)

ELCON · elcon.im

ELCON · elcon.im

DWG. NO 도면번호 HE000506 1/1

COL. 6A (AUTO/INS)

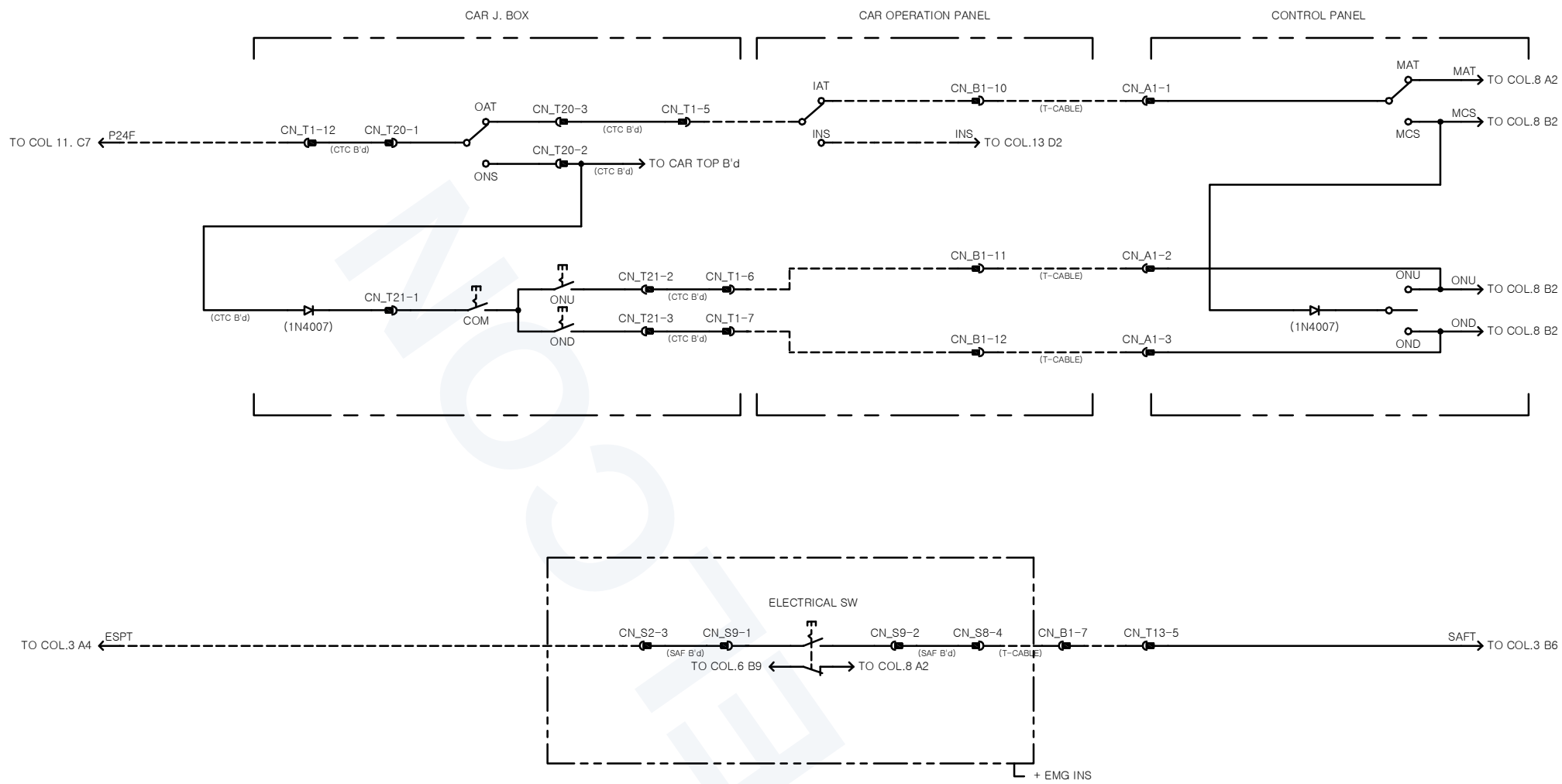

THIS DRAWING IS PROPRIETARY TO HELCO
NO PART OF THIS DRAWING MAY BE REPRODUCED
WITHOUT THE PERMISSION OF HELCO
허가없이 복사할 수 없음

내 부 처	

CHANGE 개정란		
A1	COMPLETELY REVISED	2013. 04. 17 진 호 연

TOLERANCES—UNLESS OTHERWISE SPECIFIED

SIZE OVER	SIZE TO INCL.	TURN. PNCH'G DIST.OF HOLE STR.	MLDG. DIE CSTG. PRCN.CSTG DRAW.	SH.MET WELD GAS CTG.	CSTG. FORG.
1	4	± 0.1	± 0.2	± 0.3	± 0.5
4	16	± 0.2	± 0.3	± 0.5	± 0.7
16	63	± 0.3	± 0.4	± 0.7	± 0.9
63	250	± 0.4	± 0.6	± 1.2	± 1.3
250	500	± 0.6	± 0.8	± 1.5	± 1.8
500	1000	± 0.8	± 1.0	± 2.0	± 2.5
1000	2000	± 1.1	± 1.5	± 2.5	± 3.3
ANGLE		± 0.25°	± 0.5°	± 1.0°	± 2.0°

HYUNDAI ELEVATOR CO., LTD.

	DRWN BY 제 도	DSND BY 설 계	CHKD BY 검 토	APPD BY 승 인
표 준	진 호 연		김주찬	심영석
임 시 보 류	2012. 12. 20		01/31	01/31

UNIT 단위	MM	APPAR.	WBST1 & WBLX1
SCALE 척도	N/S	TITLE 제 목	ELEM.W.DIAGRAM
3RD ANGLE 3 각 법			
REF. NO 참고도면		DWG. NO 도면번호	HE000506 1/1

HDW-91-003A

A3 (420mmx297MM)

ELCON · elcon.im

ELCON · elcon.im

THIS DRAWING IS PROPRIETARY TO HELCO
NO PART OF THIS DRAWING MAY BE REPRODUCED
WITHOUT THE PERMISSION OF HELCO
허가없이 복사할 수 없음

도면번호 DWG. NO	HE000506 2/2

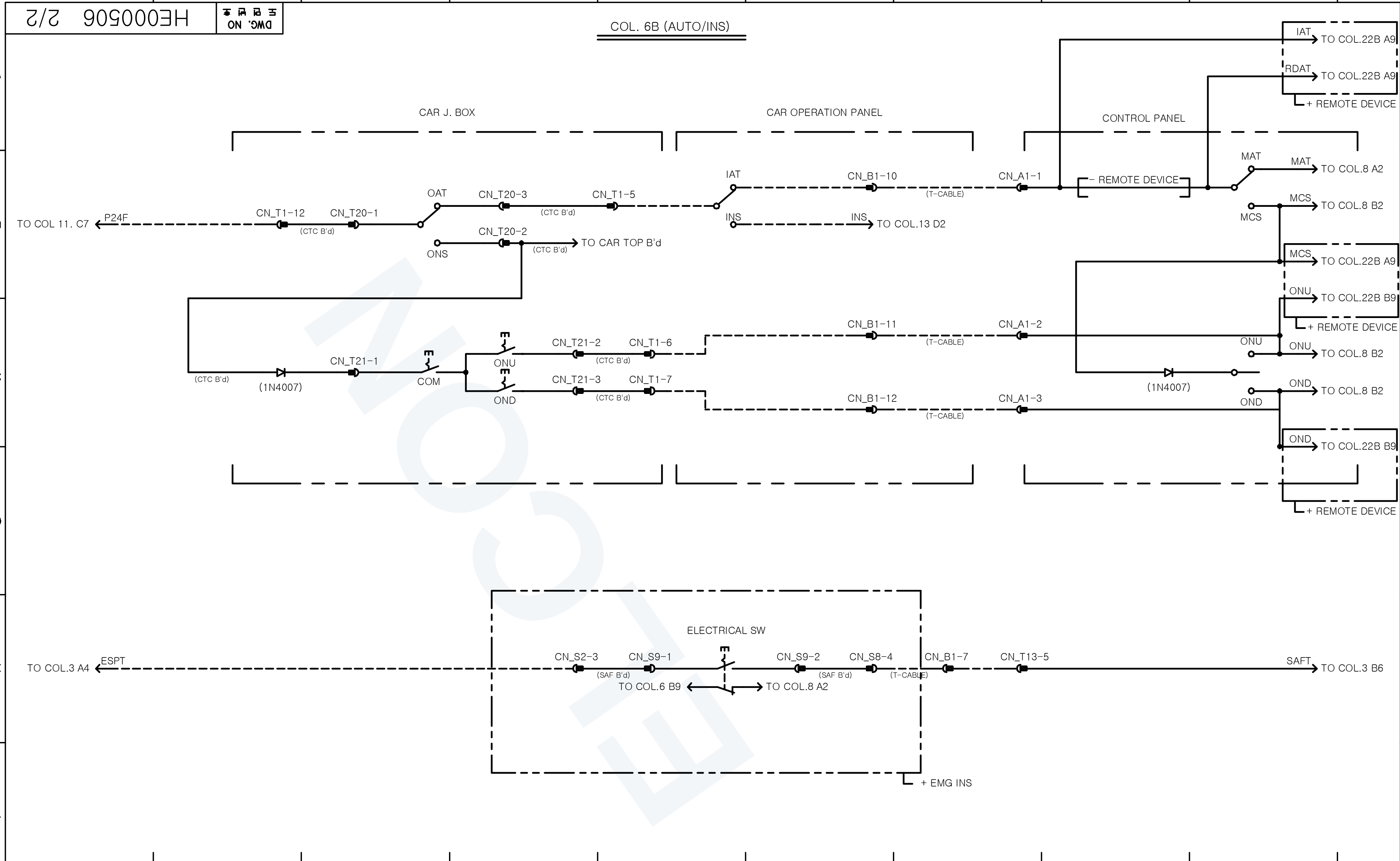

배 부 처

CHANGE 개정란		
A1	COMPLETELY REVISED	2013. 04. 17 진 호 연

TOLERANCES–UNLESS OTHERWISE SPECIFIED

SIZE OVER	TO INCL.	TURN. PNCH'G DIST.OF HOLE STR.	MLDG. DIE CSTG. PRCN.CSTG DRAW.	SH.MET WELD GAS CTG.	CSTG. FORG.
1	4	± 0.1	± 0.2	± 0.3	± 0.5
4	16	± 0.2	± 0.3	± 0.5	± 0.7
16	63	± 0.3	± 0.4	± 0.7	± 0.9
63	250	± 0.4	± 0.6	± 1.2	± 1.3
250	500	± 0.6	± 0.8	± 1.5	± 1.8
500	1000	± 0.8	± 1.0	± 2.0	± 2.5
1000	2000	± 1.1	± 1.5	± 2.5	± 3.3
ANGLE		± 0.25°	± 0.5°	± 1.0°	± 2.0°

HYUNDAI ELEVATOR CO., LTD.

	DRWN BY 제 도	DSND BY 설 계	CHKD BY 검 토	APPD BY 승 인
표 준 / 임 시 / 보 류	진 호 연		김주찬	심영석
	2012 .12. 20		01/31	01/31

UNIT 단위	MM	APPAR.	WBSS1
SCALE 척도	N/S	TITLE 제 목	ELEM.W.DIAGRAM
3RD ANGLE 3 각 법			
REF. NO 참고도면		DWG. NO 도면번호	HE000506 2/2

COL. 7A (MAIN B'd 1)

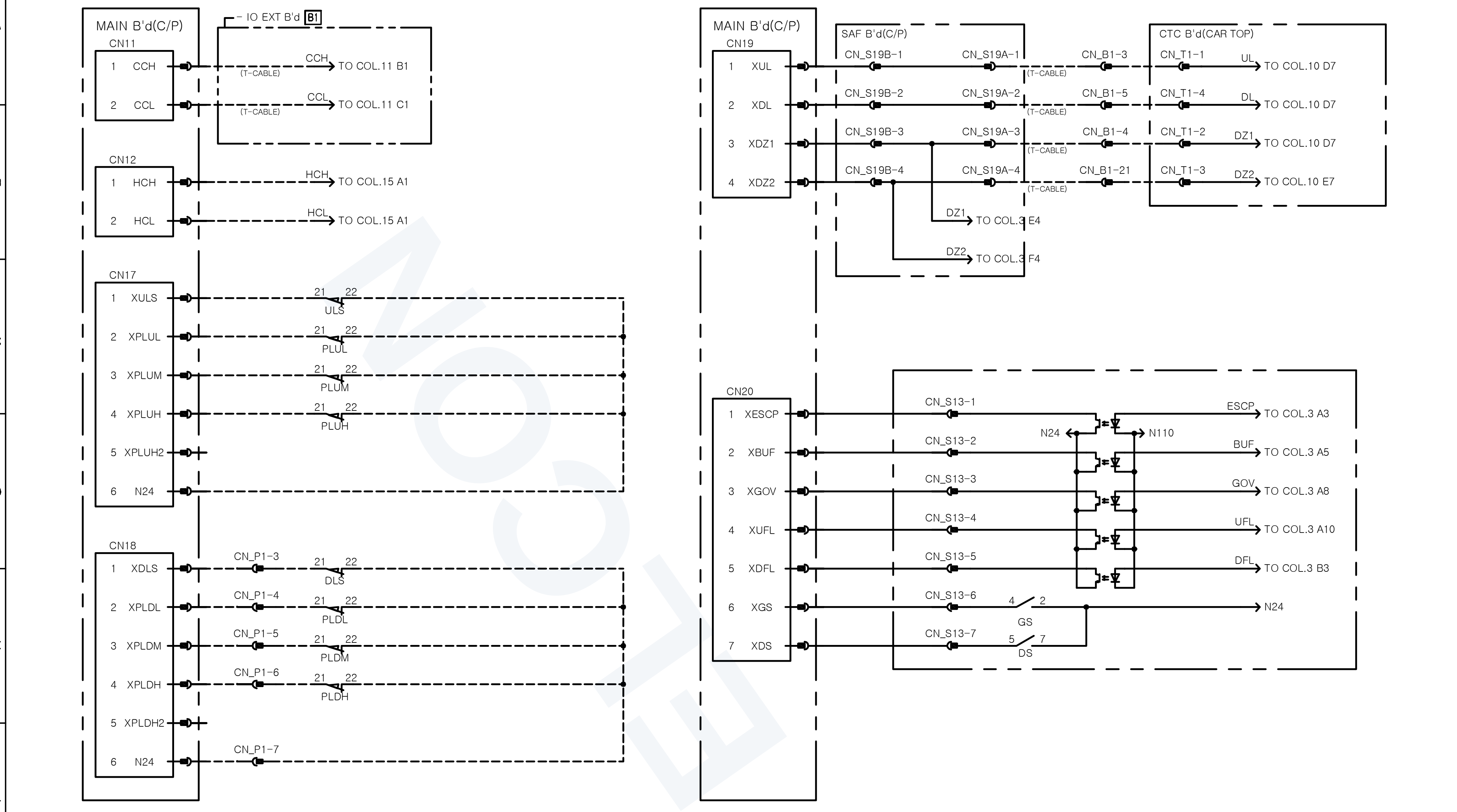

THIS DRAWING IS PROPRIETARY TO HELCO
NO PART OF THIS DRAWING MAY BE REPRODUCED
WITHOUT THE PERMISSION OF HELCO
허가없이 복사할 수 없음

배 부 처

CHANGE 개정란		
A1	COMPLETELY REVISED	2013. 04. 17 진 호 연
B1	WAS NOT IO EXT B'd OPTION	2013. 05. 10 진 호 연

TOLERANCES–UNLESS OTHERWISE SPECIFIED

SIZE OVER	SIZE TO INCL.	TURN. PNCH'G DIST.OF HOLE STR.	MLDG. DIE CSTG. PRCN.CSTG DRAW.	SH.MET WELD GAS CTG.	CSTG. FORG.
1	4	± 0.1	± 0.2	± 0.3	± 0.5
4	16	± 0.2	± 0.3	± 0.5	± 0.7
16	63	± 0.3	± 0.4	± 0.7	± 0.9
63	250	± 0.4	± 0.6	± 1.2	± 1.3
250	500	± 0.6	± 0.8	± 1.5	± 1.8
500	1000	± 0.8	± 1.0	± 2.0	± 2.5
1000	2000	± 1.1	± 1.5	± 2.5	± 3.3
ANGLE		± 0.25°	± 0.5°	± 1.0°	± 2.0°

HYUNDAI ELEVATOR CO., LTD.

표 준	DRWN BY 제 도	DSND BY 설 계	CHKD BY 검 토	APPD BY 승 인
임 시	진 호 연		김주찬	심영석
보 류	2012. 12. 03		01/31	01/31

UNIT 단위	MM	APPAR.	WBST1 & WBLX1
SCALE 척도	N/S	TITLE 제 목	ELEM.W.DIAGRAM
3RD ANGLE 3 각 법			
REF. NO 참고도면		DWG. NO 도면번호	HE000507 1/2

ELCON · elcon.im

ELCON · elcon.im

COL. 7B (MAIN B'd 1)

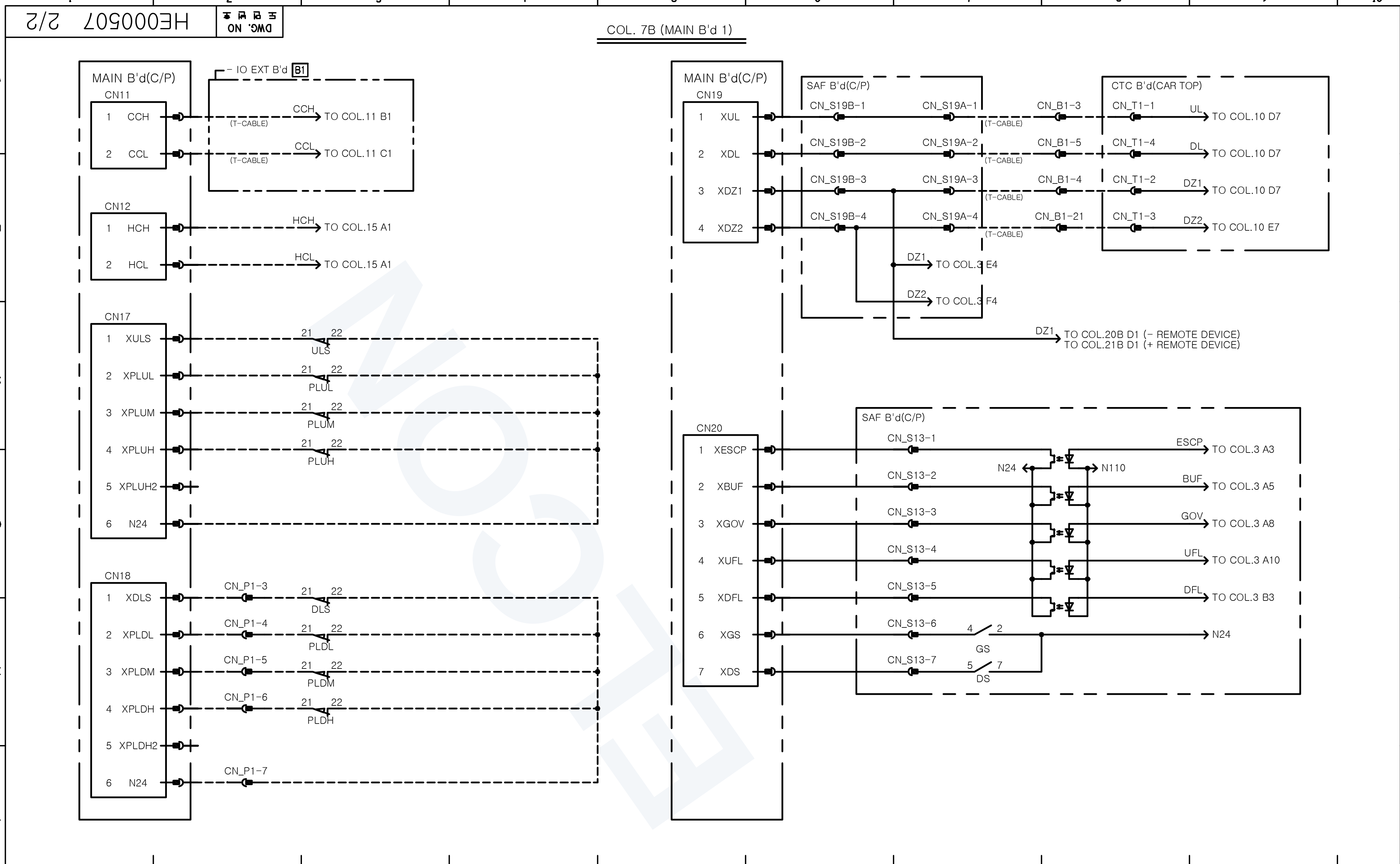

THIS DRAWING IS PROPRIETARY TO HELCO
NO PART OF THIS DRAWING MAY BE REPRODUCED
WITHOUT THE PERMISSION OF HELCO
허가없이 복사할 수 없음

배부처

CHANGE 개정란

A1	COMPLETELY REVISED	2013. 04. 17	진 호 연
B1	WAS NOT IO EXT B'd OPTION	2013. 05. 10	진 호 연

TOLERANCES—UNLESS OTHERWISE SPECIFIED

SIZE OVER	TO INCL.	TURN. PNCH'G DIST.OF HOLE STR.	MLDG. DIE CSTG. PRCN.CSTG DRAW.	SH.MET WELD GAS CTG.	CSTG. FORG.
1	4	± 0.1	± 0.2	± 0.3	± 0.5
4	16	± 0.2	± 0.3	± 0.5	± 0.7
16	63	± 0.3	± 0.4	± 0.7	± 0.9
63	250	± 0.4	± 0.6	± 1.2	± 1.3
250	500	± 0.6	± 0.8	± 1.5	± 1.8
500	1000	± 0.8	± 1.0	± 2.0	± 2.5
1000	2000	± 1.1	± 1.5	± 2.5	± 3.3
ANGLE		± 0.25°	± 0.5°	± 1.0°	± 2.0°

HYUNDAI ELEVATOR CO., LTD.

	DRWN BY 제 도	DSND BY 설 계	CHKD BY 검 토	APPD BY 승 인
표 준 / 임 시 / 보 류	진 호 연		김주찬	심영석
	2012. 12. 03		01/31	01/31

UNIT 단위	MM	APPAR.	WBSS1
SCALE 척도	N/S	TITLE 제 목	ELEM.W.DIAGRAM
3RD ANGLE 3 각 법			
REF. NO 참고도면		DWG. NO 도면번호	HE000507 2/2

HDW-91-003A

A3 (420mmx297MM)

ELCON · elcon.im

DWG. NO 도면번호 HE000508 1/2

COL. 8A (MAIN B'd 2)

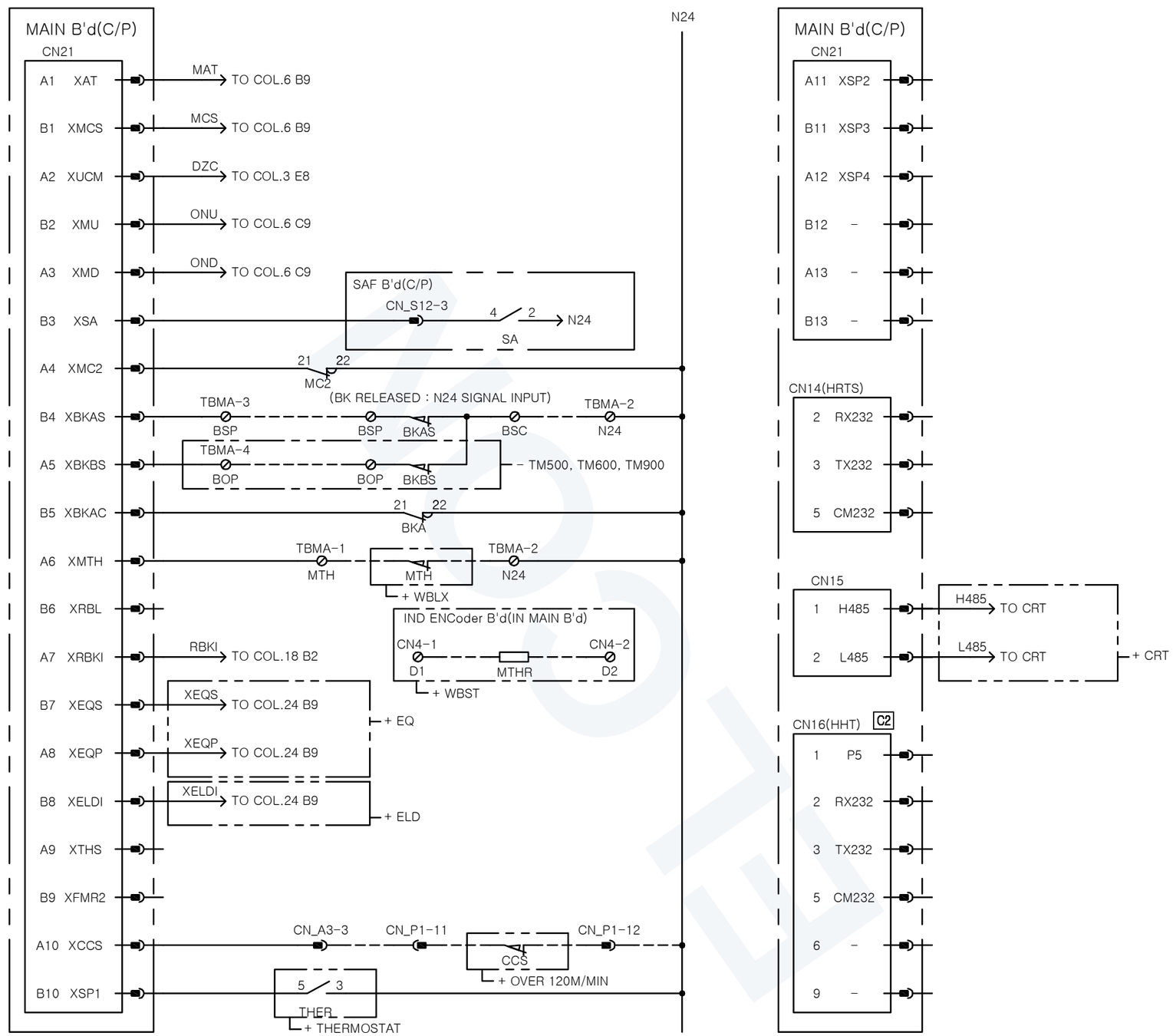

THIS DRAWING IS PROPRIETARY TO HELCO
NO PART OF THIS DRAWING MAY BE REPRODUCED
WITHOUT THE PERMISSION OF HELCO
허가없이 복사할 수 없음

배 부 처

A1	2013. 04. 17 진 호 연	COMPLETELY REVISED
B1	2013. 04. 23 진 호 연	ADDED TBMA-4 BKBS
C1	2013. 05. 08 진 호 연	CHANGE BK S/W WIRING
C2		WAS NOT ON(PIN 1,6,9)
D1	2013. 05. 13 진 호 연	ADDED EQ OPTION

CHANGE 개 정 란

TOLERANCES–UNLESS OTHERWISE SPECIFIED

SIZE OVER	SIZE TO INCL.	TURN. PNCH'G DIST.OF HOLE STR.	MLDG. DIE CSTG. PRCN.CSTG DRAW.	SH.MET WELD GAS CTG.	CSTG. FORG.
1	4	± 0.1	± 0.2	± 0.3	± 0.5
4	16	± 0.2	± 0.3	± 0.5	± 0.7
16	63	± 0.3	± 0.4	± 0.7	± 0.9
63	250	± 0.4	± 0.6	± 1.2	± 1.3
250	500	± 0.6	± 0.8	± 1.5	± 1.8
500	1000	± 0.8	± 1.0	± 2.0	± 2.5
1000	2000	± 1.1	± 1.5	± 2.5	± 3.3
ANGLE		± 0.25°	± 0.5°	± 1.0°	± 2.0°

HYUNDAI ELEVATOR CO., LTD.

표 준	DRWN BY 제 도	DSND BY 설 계	CHKD BY 검 토	APPD BY 승 인
임 시 보 류	진 호 연		김주찬	심영석
	2012.	12. 03	01/31	01/31

UNIT 단위	MM	APPAR.	WBST1 & WBLX1
SCALE 척도	N/S	TITLE 제 목	ELEM.W.DIAGRAM
3RD ANGLE 3 각 법			
REF. NO 참고도면		DWG. NO 도면번호	HE000508 1/2

HDW–91–003A

A3 (420mmx297MM)

ELCON · elcon.im

ELCON · elcon.im

DWG. NO 도면번호 HE000508 2/2

COL. 8B (MAIN B'd 2)

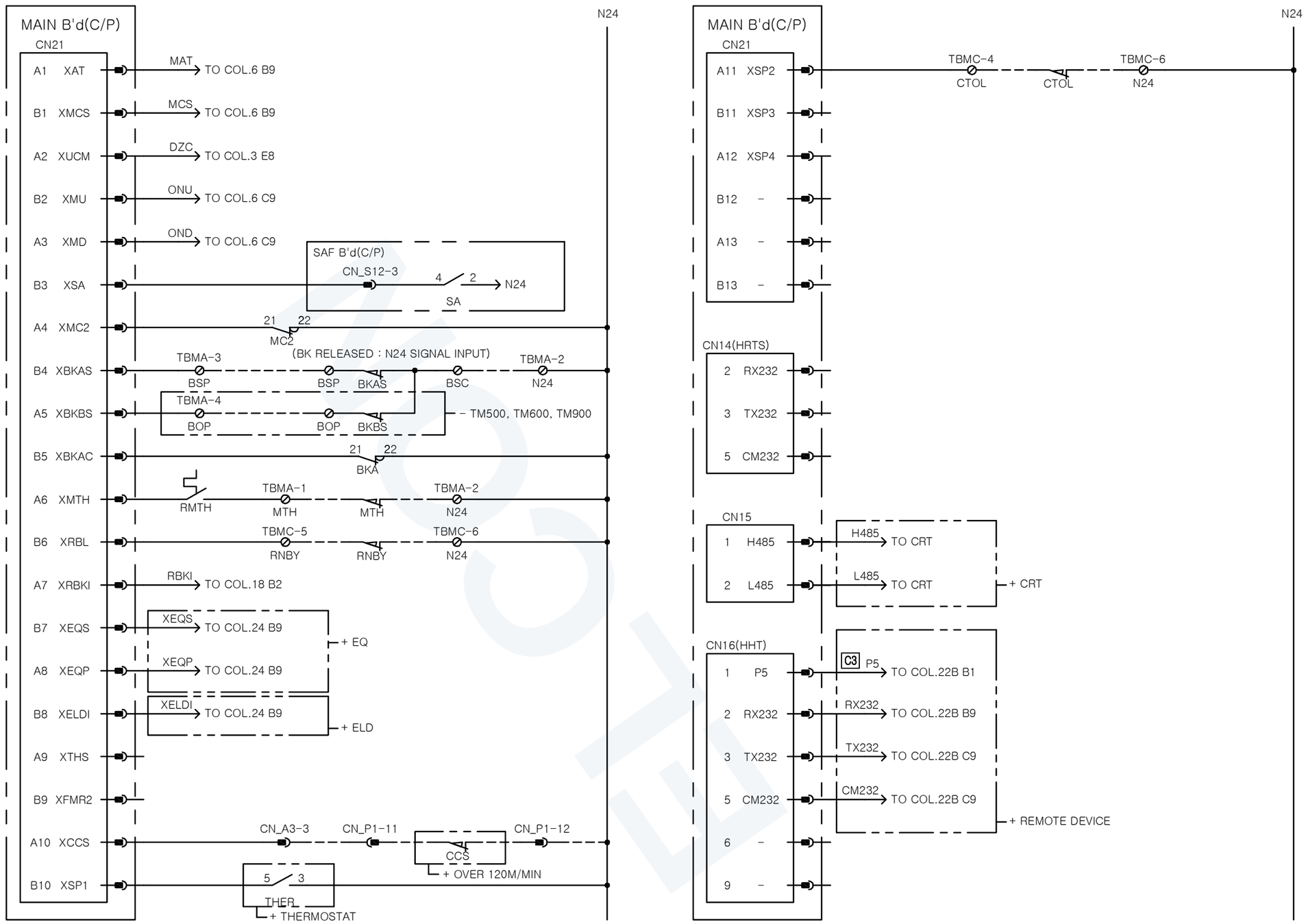

THIS DRAWING IS PROPRIETARY TO HELCO
NO PART OF THIS DRAWING MAY BE REPRODUCED
WITHOUT THE PERMISSION OF HELCO
허가없이 복사할 수 없음

배부처	

	CHANGE 개정란
A1	COMPLETELY REVISED 2013. 04. 17 진 호 연
B1	ADDED TBMA-4 BKBS 2013. 04. 23 진 호 연
C1	CHANGE BK S/W WIRING 2013. 05. 08 진 호 연
C2	ADDED ELD OPTION
C3	WAS NOT ON
D1	ADDED EQ OPTION 2013. 05. 13 진 호 연
E1	MOVED FROM D.3 2013. 05. 16 진 호 연

TOLERANCES–UNLESS OTHERWISE SPECIFIED

SIZE OVER	SIZE TO INCL.	TURN. PNCH'G DIST.OF HOLE STR.	MLDG. DIE CSTG. PRCN.CSTG DRAW.	SH.MET WELD GAS CTG.	CSTG. FORG.
1	4	± 0.1	± 0.2	± 0.3	± 0.5
4	16	± 0.2	± 0.3	± 0.5	± 0.7
16	63	± 0.3	± 0.4	± 0.7	± 0.9
63	250	± 0.4	± 0.6	± 1.2	± 1.3
250	500	± 0.6	± 0.8	± 1.5	± 1.8
500	1000	± 0.8	± 1.0	± 2.0	± 2.5
1000	2000	± 1.1	± 1.5	± 2.5	± 3.3
ANGLE		± 0.25°	± 0.5°	± 1.0°	± 2.0°

HYUNDAI ELEVATOR CO., LTD.

	DRWN BY 제 도	DSND BY 설 계	CHKD BY 검 토	APPD BY 승 인
표 준	진 호 연		김주찬	심영석
임 시				
보 류				
	2012. 12. 03		01/31	01/31

UNIT 단위	MM	APPAR.	WBSS1
SCALE 척도	N/S	TITLE 제 목	ELEM.W.DIAGRAM
3RD ANGLE 3 각 법			
REF. NO 참고도면		DWG. NO 도면번호	HE000508 2/2

HDW–91–003A

A3 (420mmx297MM)

ELCON · elcon.im

DWG. NO 도면번호 HE000509 1/1

COL. 9 (MAIN B'd 3)

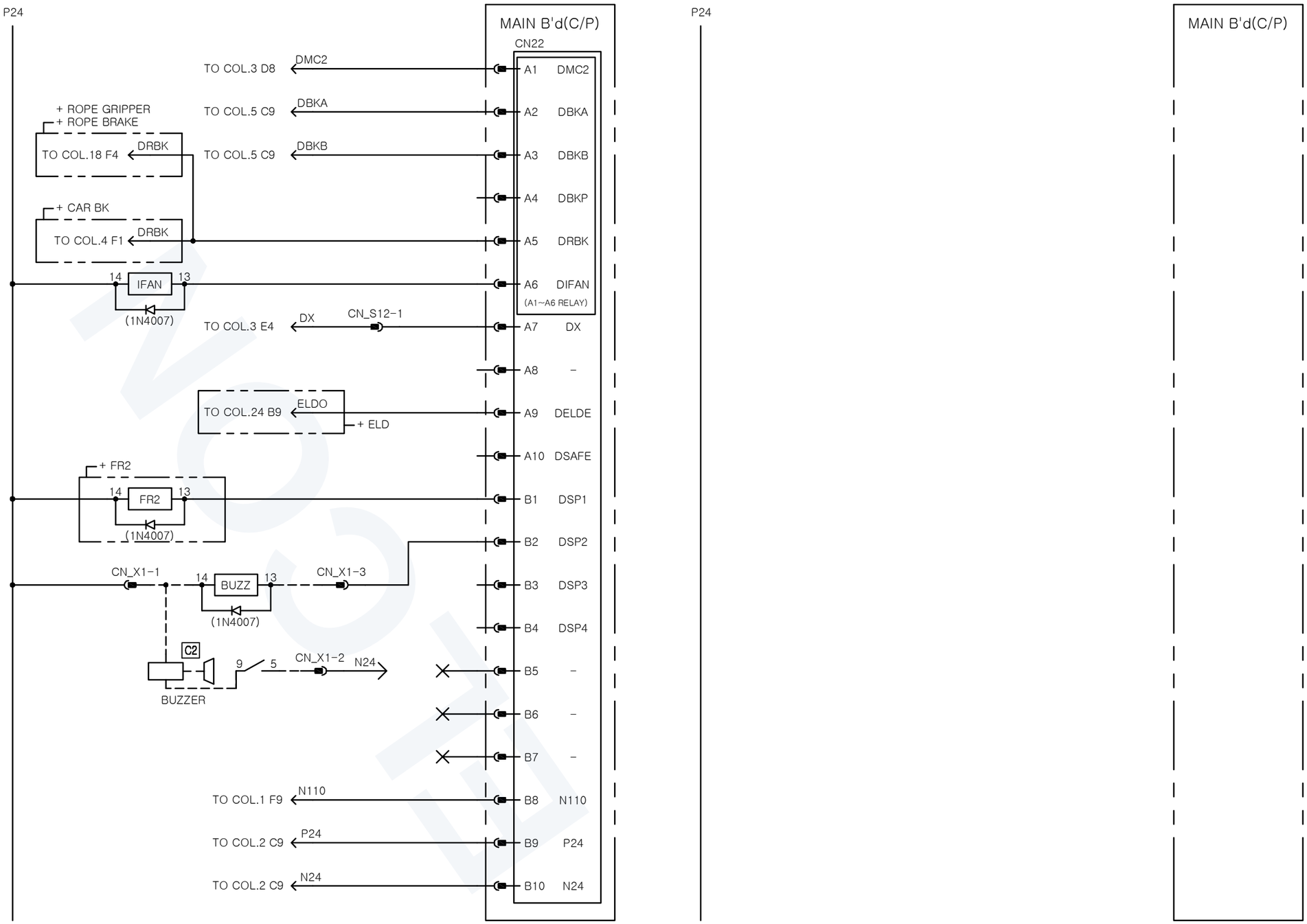

IFAN (MY4 DC24V)		
9-5		COL.1 B5
10-6		COL.1B D5 C1
11-7		-
12-8		-
9-1		-
10-2		-
11-3		-
12-4		-
14(+24V), 13(-24V)		

FR2 (MY4 DC24V) D2		
9-5		-
10-6		-
11-7		-
12-8		-
9-1		-
10-2		-
11-3		COL.3 C5
12-4		COL.3 C6
14(+24V), 13(-24V)		

BUZZ (MY4 DC24V)		
9-5		COL.9 D3
10-6		-
11-7		-
12-8		-
9-1		-
10-2		-
11-3		-
12-4		-
14(+24V), 13(-24V)		

THIS DRAWING IS PROPRIETARY TO HELCO
NO PART OF THIS DRAWING MAY BE REPRODUCED
WITHOUT THE PERMISSION OF HELCO
허가없이 복사할 수 없음

배부처

A1	COMPLETELY REVISED	2013. 04. 17 진 호 연	A
B1	WAS COL.3 C6	2013. 04. 23 진 호 연	B
C1	ADDED COL.1B D5	2013. 05. 03 진 호 연	C
C2	WAS NOT ON		
D1	WAS COL.3 C6	2013. 05. 14 진 호 연	D
D2	WAS G2R RELAY		

CHANGE 개정란

TOLERANCES-UNLESS OTHERWISE SPECIFIED

SIZE OVER	SIZE TO INCL.	TURN. PNCH'G DIST.OF HOLE STR.	MLDG. DIE CSTG. PRCN.CSTG DRAW.	SH.MET WELD GAS CTG.	CSTG. FORG.
1	4	± 0.1	± 0.2	± 0.3	± 0.5
4	16	± 0.2	± 0.3	± 0.5	± 0.7
16	63	± 0.3	± 0.4	± 0.7	± 0.9
63	250	± 0.4	± 0.6	± 1.2	± 1.3
250	500	± 0.6	± 0.8	± 1.5	± 1.8
500	1000	± 0.8	± 1.0	± 2.0	± 2.5
1000	2000	± 1.1	± 1.5	± 2.5	± 3.3
ANGLE		± 0.25°	± 0.5°	± 1.0°	± 2.0°

HYUNDAI ELEVATOR CO., LTD.

	DRWN BY 제 도	DSND BY 설 계	CHKD BY 검 토	APPD BY 승 인
표 준				
임 시 보 류	진 호 연		김주찬	심영석
	2012. 12. 03		01/31	01/31

UNIT 단위: MM
SCALE 척도: N/S
3RD ANGLE 3 각 법
REF. NO 참고도면

APPAR.: WBST1 & WBLX1 & WBSS1
TITLE 제 목: ELEM.W.DIAGRAM
DWG. NO 도면번호: HE000509 1/1

HDW-91-003A

A3 (420mmx297MM)

ELCON · elcon.im

DWG. NO 도면번호 HE000510 1/1

COL. 10 (CAR TOP 1)

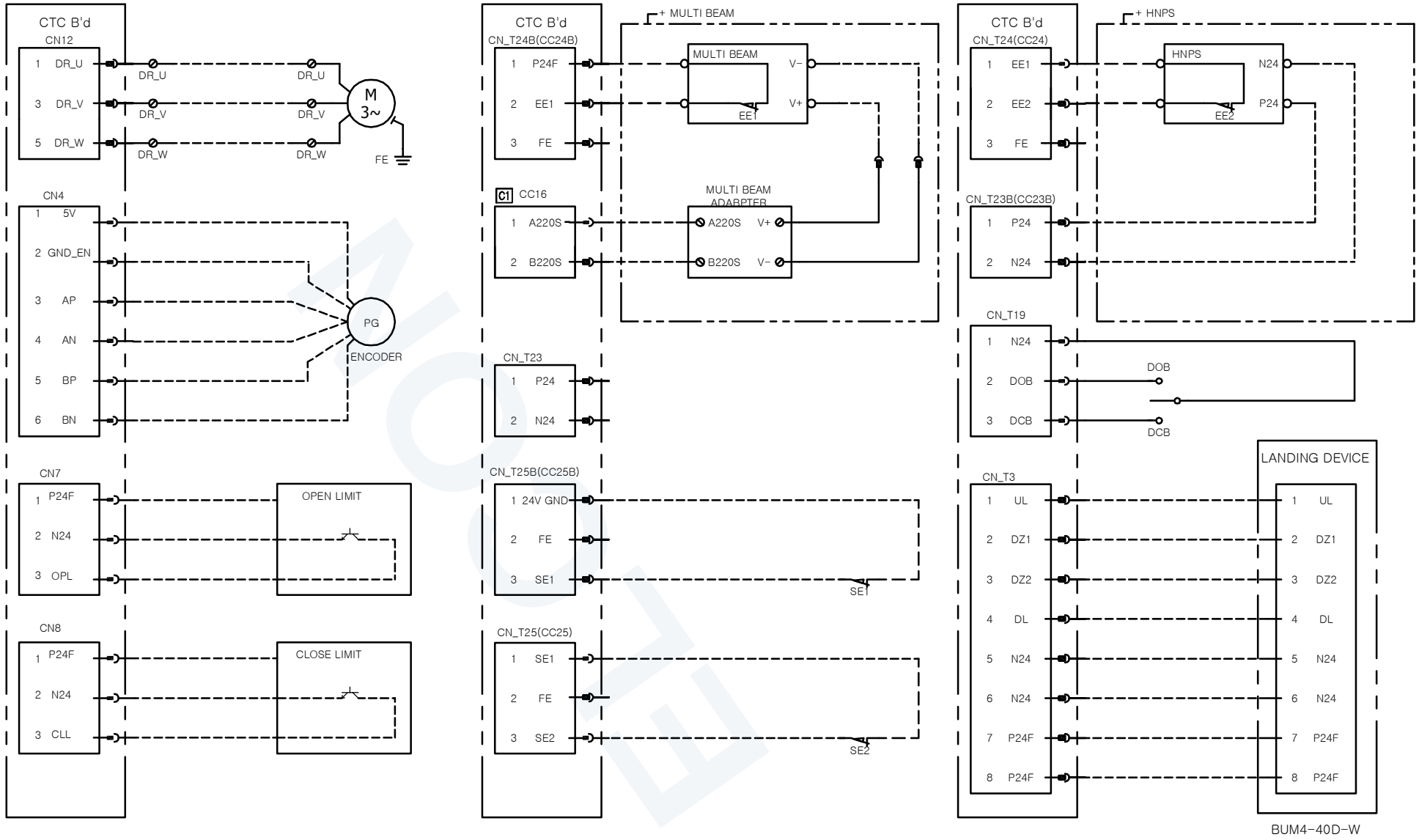

THIS DRAWING IS PROPRIETARY TO HELCO
NO PART OF THIS DRAWING MAY BE REPRODUCED
WITHOUT THE PERMISSION OF HELCO
허가없이 복사할 수 없음

배부처	

CHANGE 개정란		
A1	COMPLETELY REVISED	2013. 04. 17 진 호 연
B1	COMPLETELY REVISED	2013. 04. 17 진 호 연
C1	WAS CN_T16	2013. 05. 07 진 호 연

TOLERANCES—UNLESS OTHERWISE SPECIFIED

SIZE (OVER / TO INCL.)	TURN. PNCH'G DIST. OF HOLE STR.	MLDG. DIE CSTG. PRCN. CSTG DRAW.	SH. MET WELD GAS CTG.	CSTG. FORG.
1 / 4	± 0.1	± 0.2	± 0.3	± 0.5
4 / 16	± 0.2	± 0.3	± 0.5	± 0.7
16 / 63	± 0.3	± 0.4	± 0.7	± 0.9
63 / 250	± 0.4	± 0.6	± 1.2	± 1.3
250 / 500	± 0.6	± 0.8	± 1.5	± 1.8
500 / 1000	± 0.8	± 1.0	± 2.0	± 2.5
1000 / 2000	± 1.1	± 1.5	± 2.5	± 3.3
ANGLE	± 0.25°	± 0.5°	± 1.0°	± 2.0°

HYUNDAI ELEVATOR CO., LTD.

	DRWN BY 제 도	DSND BY 실 계	CHKD BY 검 토	APPD BY 승 인
표 준				
임 시	진 호 연		김주찬	심영석
보 류				
	2013. 01. 15		01/31	01/31

UNIT 단위	MM	APPAR.	WBST1 & WBLX1 & WBSS1
SCALE 척도	N/S	TITLE 제 목	ELEM.W.DIAGRAM
3RD ANGLE 3 각 법			
REF. NO 참고도면		DWG. NO 도면번호	HE000510 1/1

HDW-91-003A

A3 (420mmx297MM)

ELCON · elcon.im

HE000511 1/1 DWG. NO 도면번호

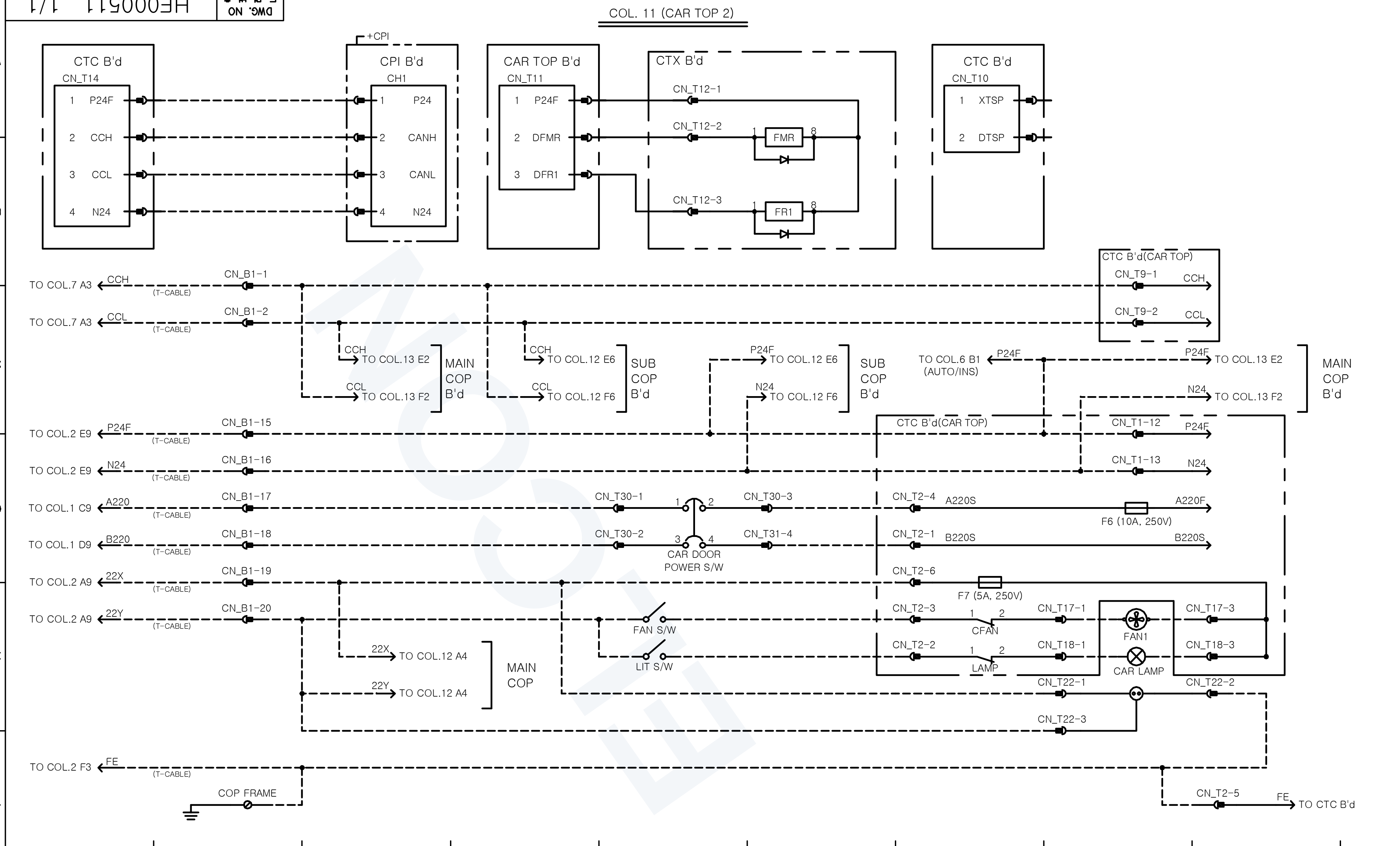

THIS DRAWING IS PROPRIETARY TO HELCO
NO PART OF THIS DRAWING MAY BE REPRODUCED
WITHOUT THE PERMISSION OF HELCO
허가없이 복사할 수 없음

배 부 처

CHANGE 개 정 란

A1 COMPLETELY REVISED 2013. 04. 17 진 호 연

TOLERANCES—UNLESS OTHERWISE SPECIFIED					
SIZE \ WORK		TURN. PNCH'G DIST.OF HOLE STR.	MLDG. DIE CSTG. PRCN.CSTG DRAW.	SH.MET WELD GAS CTG.	CSTG. FORG.
OVER	TO INCL.				
1	4	± 0.1	± 0.2	± 0.3	± 0.5
4	16	± 0.2	± 0.3	± 0.5	± 0.7
16	63	± 0.3	± 0.4	± 0.7	± 0.9
63	250	± 0.4	± 0.6	± 1.2	± 1.3
250	500	± 0.6	± 0.8	± 1.5	± 1.8
500	1000	± 0.8	± 1.0	± 2.0	± 2.5
1000	2000	± 1.1	± 1.5	± 2.5	± 3.3
ANGLE		± 0.25°	± 0.5°	± 1.0°	± 2.0°

HYUNDAI ELEVATOR CO., LTD.

표 준	DRWN BY 제 도	DSND BY 설 계	CHKD BY 검 토	APPD BY 승 인
임 시	진 호 연		김주찬	심영석
보 류	2012. 12. 03		01/31	01/31

UNIT 단위	MM	APPAR.	WBST1 & WBLX1 & WBSS1
SCALE 척도	N/S	TITLE 제 목	ELEM.W.DIAGRAM
3RD ANGLE 3 각 법			
REF. NO 참고도면		DWG. NO 도면번호	HE000511 1/1

HDW-91-003A

A3 (420mmx297MM)

ELCON · elcon.im

DWG. NO 도면번호 HE000512 1/1

COL. 12 (CAR OPB 1)

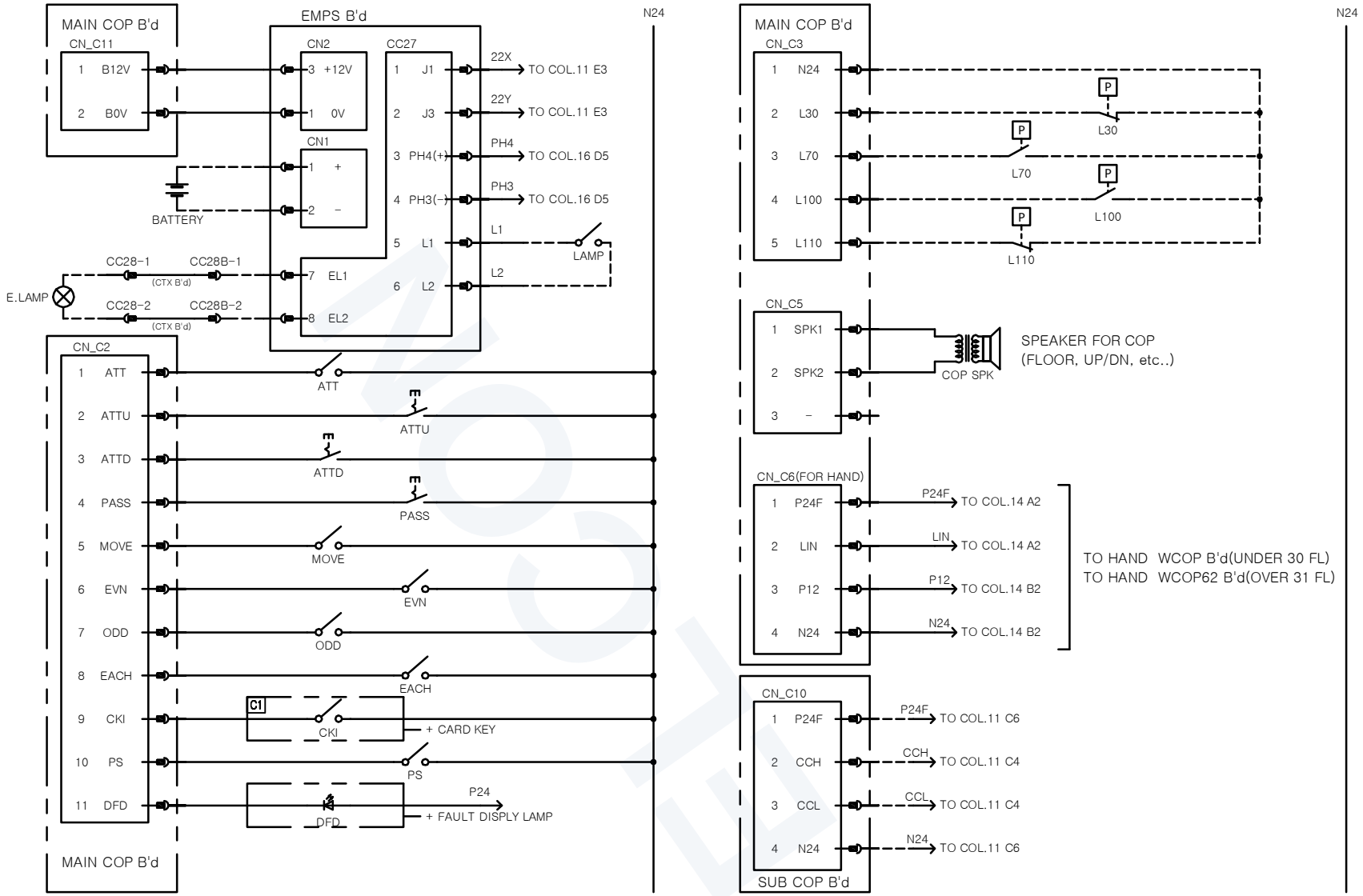

THIS DRAWING IS PROPRIETARY TO HELCO
NO PART OF THIS DRAWING MAY BE REPRODUCED
WITHOUT THE PERMISSION OF HELCO
허가없이 복사할 수 없음

내부처	

CHANGE 개정란		
A1	COMPLETELY REVISED	2013. 04. 17 진 호 연
B1	CHANGE E.LAMP WIRING	2013. 04. 23 진 호 연
C1	WAS CONTACT	2013. 05. 03 진 호 연

TOLERANCES—UNLESS OTHERWISE SPECIFIED

SIZE (OVER / TO INCL.)	TURN. PNCH'G DIST. OF HOLE STR.	MLDG. DIE CSTG. PRCN. CSTG DRAW.	SH.MET WELD GAS CTG.	CSTG. FORG.
1 / 4	± 0.1	± 0.2	± 0.3	± 0.5
4 / 16	± 0.2	± 0.3	± 0.5	± 0.7
16 / 63	± 0.3	± 0.4	± 0.7	± 0.9
63 / 250	± 0.4	± 0.6	± 1.2	± 1.3
250 / 500	± 0.6	± 0.8	± 1.5	± 1.8
500 / 1000	± 0.8	± 1.0	± 2.0	± 2.5
1000 / 2000	± 1.1	± 1.5	± 2.5	± 3.3
ANGLE	± 0.25°	± 0.5°	± 1.0°	± 2.0°

HYUNDAI ELEVATOR CO., LTD.

	DRWN BY 제 도	DSND BY 설 계	CHKD BY 검 토	APPD BY 승 인
표 준				
임 시	진 호 연		김주찬	심영석
보 류				
	2012. 12. 03		01/31	01/31

UNIT 단위	MM	APPAR.	WBST1 & WBLX1 & WBSS1
SCALE 척도	N/S	TITLE 제 목	ELEM.W.DIAGRAM
3RD ANGLE 3 각 법			
REF. NO 참고도면		DWG. NO 도면번호	HE000512 1/1

HDW-91-003A

A3 (420mmx297MM)

ELCON · elcon.im

ELCON · elcon.im

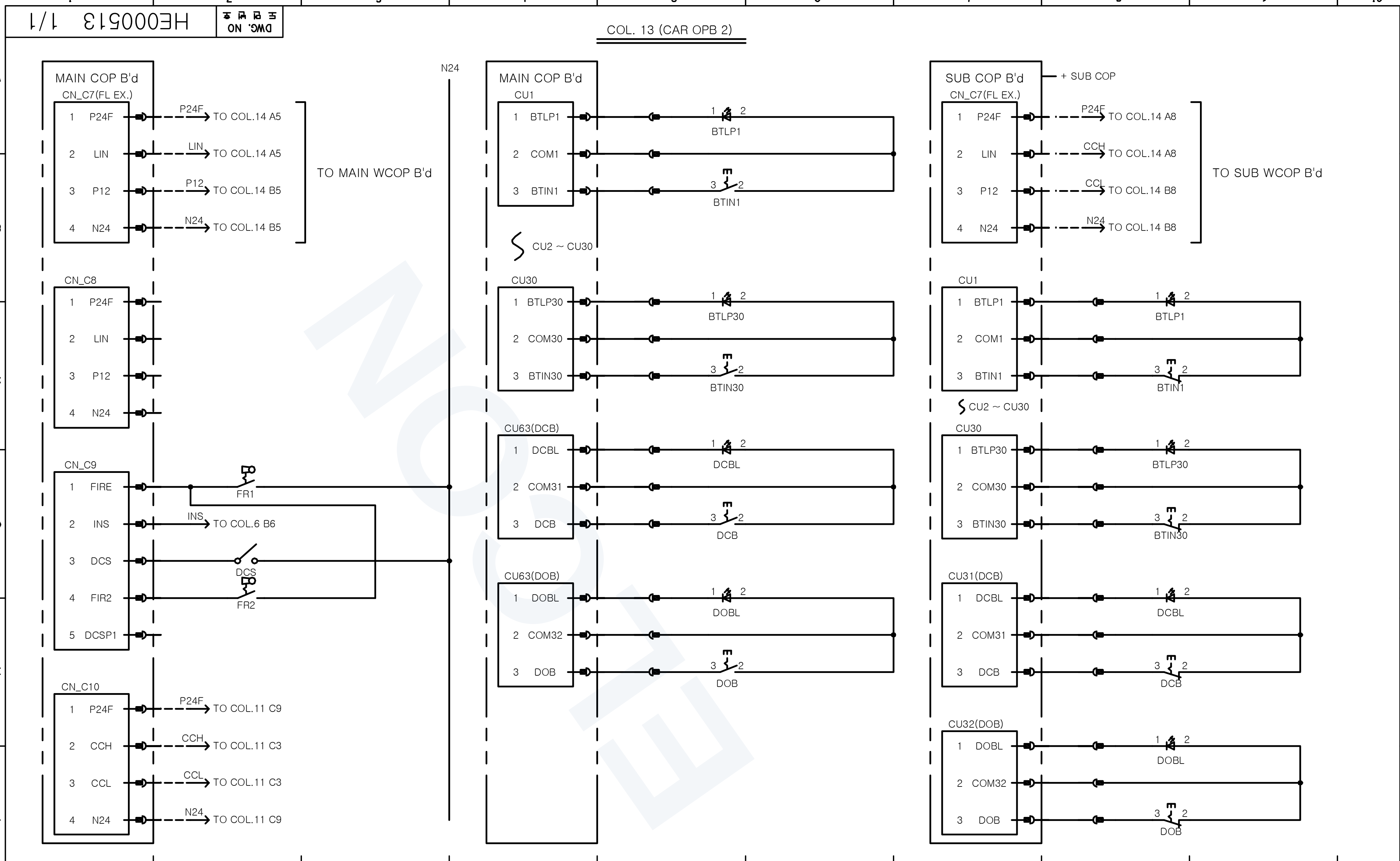

THIS DRAWING IS PROPRIETARY TO HELCO
NO PART OF THIS DRAWING MAY BE REPRODUCED
WITHOUT THE PERMISSION OF HELCO
허가없이 복사할 수 없음

배부처

CHANGE 개정란

A1 COMPLETELY REVISED 2013. 04. 17 진호연

TOLERANCES—UNLESS OTHERWISE SPECIFIED

SIZE OVER	TO INCL.	TURN. PNCH'G DIST.OF HOLE STR.	MLDG. DIE CSTG. PRCN.CSTG DRAW.	SH.MET WELD GAS CTG.	CSTG. FORG.
1	4	± 0.1	± 0.2	± 0.3	± 0.5
4	16	± 0.2	± 0.3	± 0.5	± 0.7
16	63	± 0.3	± 0.4	± 0.7	± 0.9
63	250	± 0.4	± 0.6	± 1.2	± 1.3
250	500	± 0.6	± 0.8	± 1.5	± 1.8
500	1000	± 0.8	± 1.0	± 2.0	± 2.5
1000	2000	± 1.1	± 1.5	± 2.5	± 3.3
ANGLE		± 0.25°	± 0.5°	± 1.0°	± 2.0°

HYUNDAI ELEVATOR CO., LTD.

표준 / 임시 / 보류	DRWN BY 제도	DSND BY 설계	CHKD BY 검토	APPD BY 승인
	진호연		김주찬	심영석
	2012. 12. 03		01/31	01/31

UNIT 단위	MM	APPAR.	WBST1 & WBLX1 & WBSS1
SCALE 척도	N/S	TITLE 제목	ELEM.W.DIAGRAM
3RD ANGLE 3각법			
REF. NO 참고도면		DWG. NO 도면번호	HE000513 1/1

HDW-91-003A

A3 (420MMx297MM)

HE000514 1/1
DWG. NO 도면번호

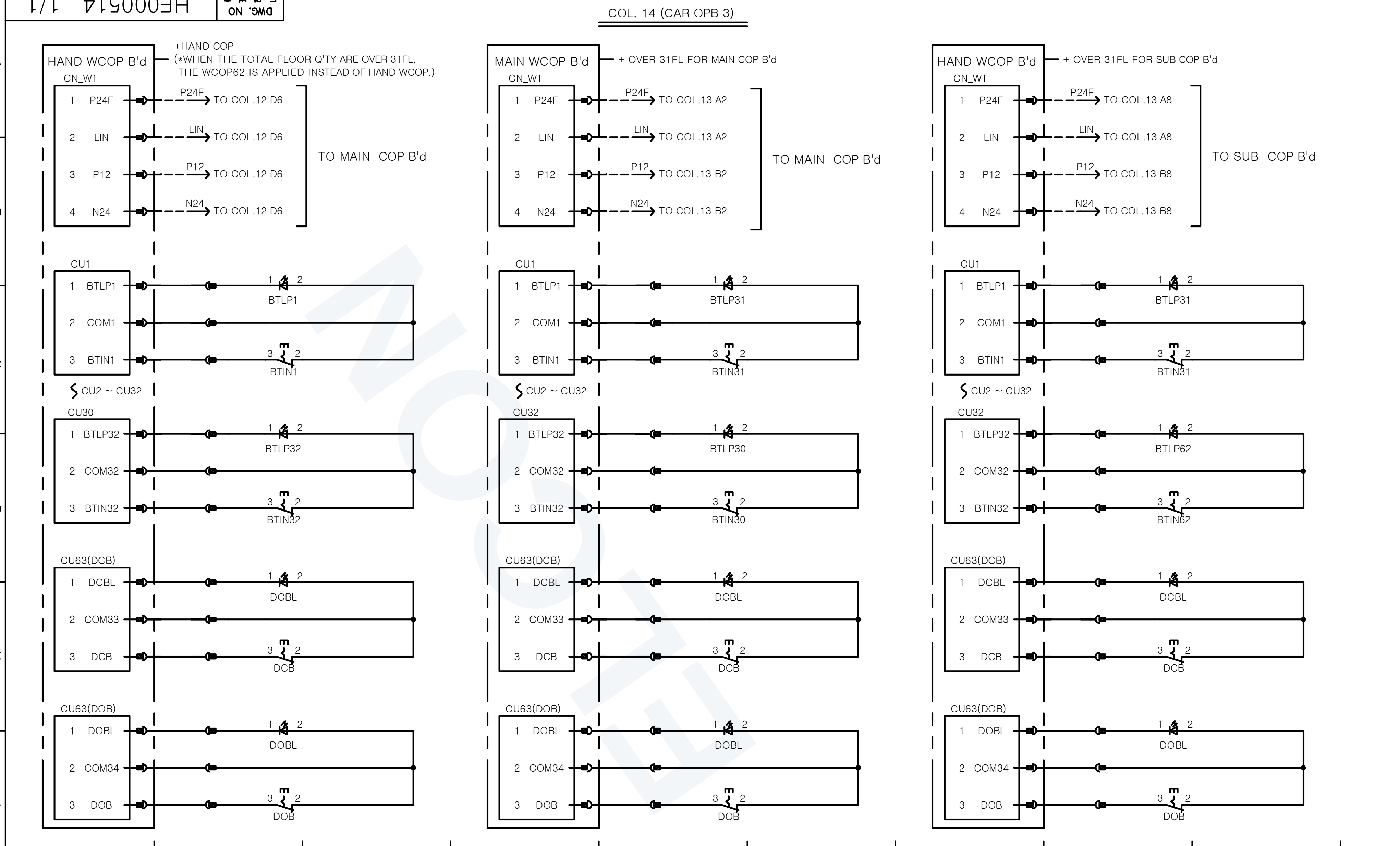

THIS DRAWING IS PROPRIETARY TO HELCO
NO PART OF THIS DRAWING MAY BE REPRODUCED
WITHOUT THE PERMISSION OF HELCO
허가없이 복사할 수 없음

배부처

CHANGE 개정란
A1 COMPLETELY REVISED 2013. 04. 17 진호연

TOLERANCES-UNLESS OTHERWISE SPECIFIED

SIZE OVER	TO INCL.	TURN. PNCH'G DIST.OF HOLE STR.	MLDG. DIE CSTG. PRCN.CSTG DRAW.	SH.MET WELD GAS CTG.	CSTG. FORG.
1	4	± 0.1	± 0.2	± 0.3	± 0.5
4	16	± 0.2	± 0.3	± 0.5	± 0.7
16	63	± 0.3	± 0.4	± 0.7	± 0.9
63	250	± 0.4	± 0.6	± 1.2	± 1.3
250	500	± 0.6	± 0.8	± 1.5	± 1.8
500	1000	± 0.8	± 1.0	± 2.0	± 2.5
1000	2000	± 1.1	± 1.5	± 2.5	± 3.3
ANGLE		± 0.25°	± 0.5°	± 1.0°	± 2.0°

HYUNDAI ELEVATOR CO., LTD.

표준	DRWN BY 제도	DSND BY 설계	CHKD BY 검토	APPD BY 승인
일시	진호연		김주찬	심영석
보류	2012. 12. 03		01/31	01/31

UNIT 단위	MM	APPAR.	WBST1 & WBLX1 & WBSS1
SCALE 척도	N/S	TITLE 제목	ELEM.W.DIAGRAM
3RD ANGLE 3각법			
REF. NO 참고도면		DWG. NO 도면번호	HE000514 1/1

ELCON · elcon.im

ELCON · elcon.im

HE000515 1/1 | DWG. NO 도면번호

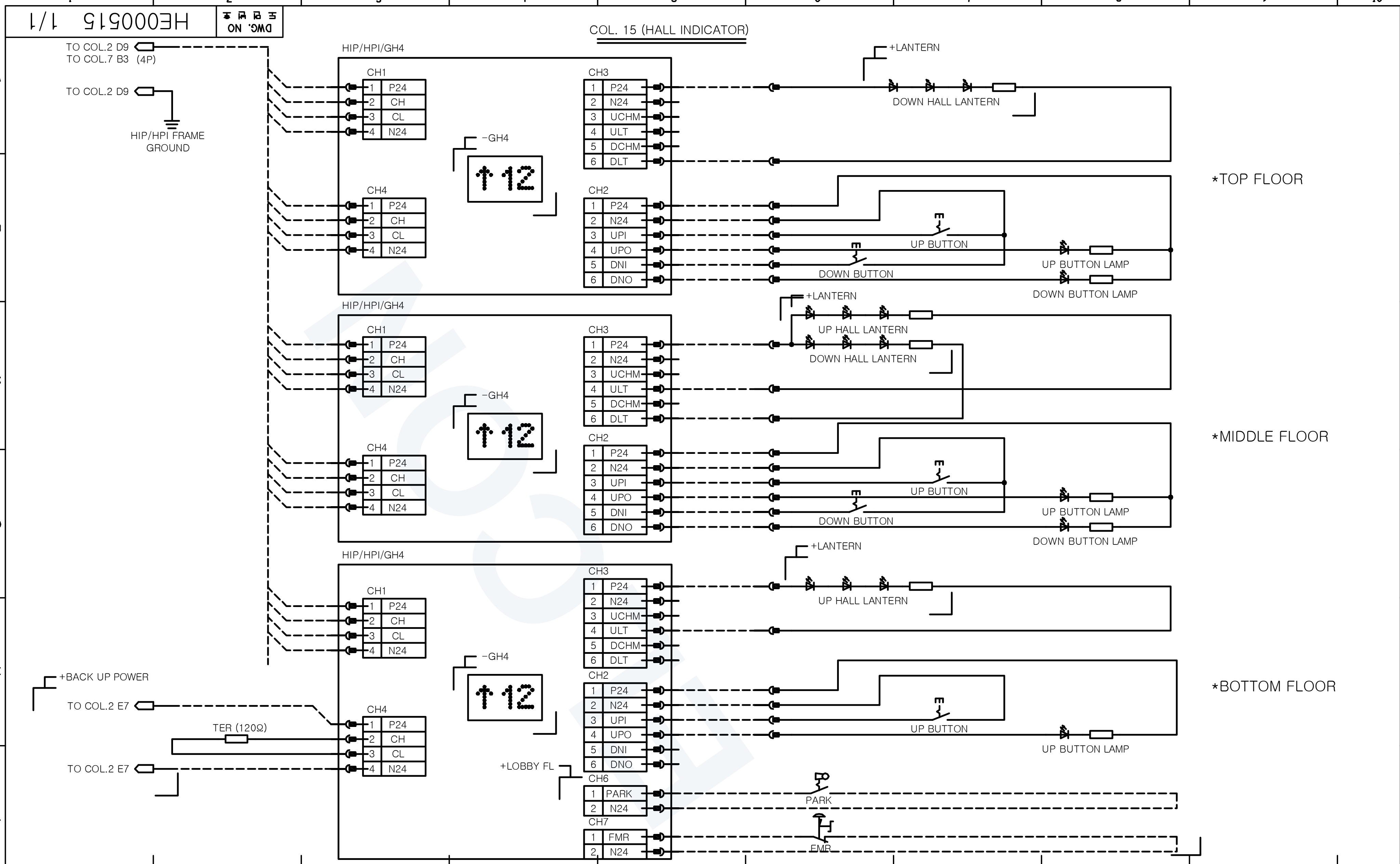

THIS DRAWING IS PROPRIETARY TO HELCO
NO PART OF THIS DRAWING MAY BE REPRODUCED
WITHOUT THE PERMISSION OF HELCO
허가없이 복사할 수 없음

배부처

CHANGE 개정란
A1 COMPLETELY REVISED 2013. 04. 17 진호연

TOLERANCES-UNLESS OTHERWISE SPECIFIED

SIZE OVER	TO INCL	TURN. PNCH'G DIST. OF HOLE STR.	MLDG. DIE CSTG. PRCN. CSTG DRAW.	SH.MET WELD GAS CTG.	CSTG. FORG.
1	4	± 0.1	± 0.2	± 0.3	± 0.5
4	16	± 0.2	± 0.3	± 0.5	± 0.7
16	63	± 0.3	± 0.4	± 0.7	± 0.9
63	250	± 0.4	± 0.6	± 1.2	± 1.3
250	500	± 0.6	± 0.8	± 1.5	± 1.8
500	1000	± 0.8	± 1.0	± 2.0	± 2.5
1000	2000	± 1.1	± 1.5	± 2.5	± 3.3
ANGLE		± 0.25°	± 0.5°	± 1.0°	± 2.0°

HYUNDAI ELEVATOR CO., LTD.

표준	DRWN BY 제도	DSND BY 설계	CHKD BY 검토	APPD BY 승인
임시	진	호 연	김주찬	심영석
보류	2012.	12. 03	01/31	01/31

UNIT 단위	MM	APPAR.	WBST1 & WBLX1 & WBSS1
SCALE 척도	N/S	TITLE 제목	ELEM.W.DIAGRAM
3RD ANGLE 3각법			
REF. NO 참고도면		DWG. NO 도면번호	HE000515 1/1

HDW-91-003A

A3 (420mmx297MM)

ELCON · elcon.im

ELCON · elcon.im

DWG. NO 도면번호 HE000516 1/1

COL. 16 (INTERPHONE)

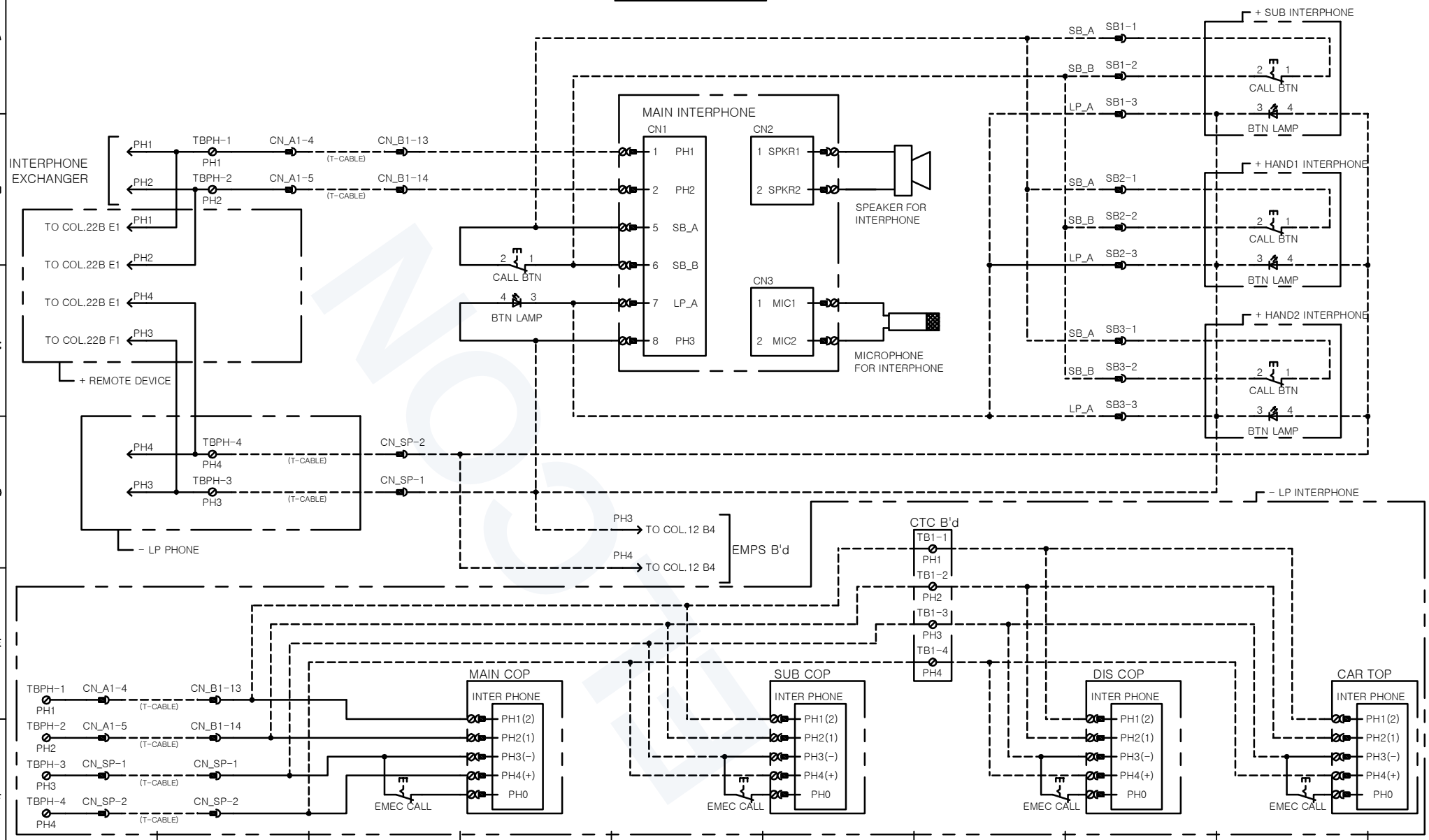

THIS DRAWING IS PROPRIETARY TO HELCO
NO PART OF THIS DRAWING MAY BE REPRODUCED
WITHOUT THE PERMISSION OF HELCO
허가없이 복사할 수 없음

내부처	

CHANGE 개정란			
A1	COMPLETELY REVISED	2013. 04. 17 진 호 연	A
B1	ADDED LP INTERHONE	2013. 04. 25 진 호 연	B

TOLERANCES–UNLESS OTHERWISE SPECIFIED

SIZE (OVER / TO INCL.)	TURN. PNCH'G DIST.OF HOLE STR.	MLDG. DIE CSTG. PRCN.CSTG DRAW.	SH.MET WELD GAS CTG.	CSTG. FORG.
1 – 4	± 0.1	± 0.2	± 0.3	± 0.5
4 – 16	± 0.2	± 0.3	± 0.5	± 0.7
16 – 63	± 0.3	± 0.4	± 0.7	± 0.9
63 – 250	± 0.4	± 0.6	± 1.2	± 1.3
250 – 500	± 0.6	± 0.8	± 1.5	± 1.8
500 – 1000	± 0.8	± 1.0	± 2.0	± 2.5
1000 – 2000	± 1.1	± 1.5	± 2.5	± 3.3
ANGLE	± 0.25°	± 0.5°	± 1.0°	± 2.0°

HYUNDAI ELEVATOR CO., LTD.

	DRWN BY 제 도	DSND BY 실 계	CHKD BY 검 토	APPD BY 승 인
표 준	진 호 연		김주찬	심영석
임 시 / 보 류	2012. 12. 03		01/31	01/31

UNIT 단위	MM	APPAR.	WBST1 & WBLX1 & WBSS1
SCALE 척도	N/S	TITLE 제 목	ELEM.W.DIAGRAM
3RD ANGLE 3 각 법			
REF. NO 참고도면		DWG. NO 도면번호	HE000516 1/1

HDW–91–003A

A3 (420mmx297MM)

ELCON · elcon.im

ELCON · elcon.im

DWG. NO 도면번호 HE000517 1/1

COL. 17 (GROUP)

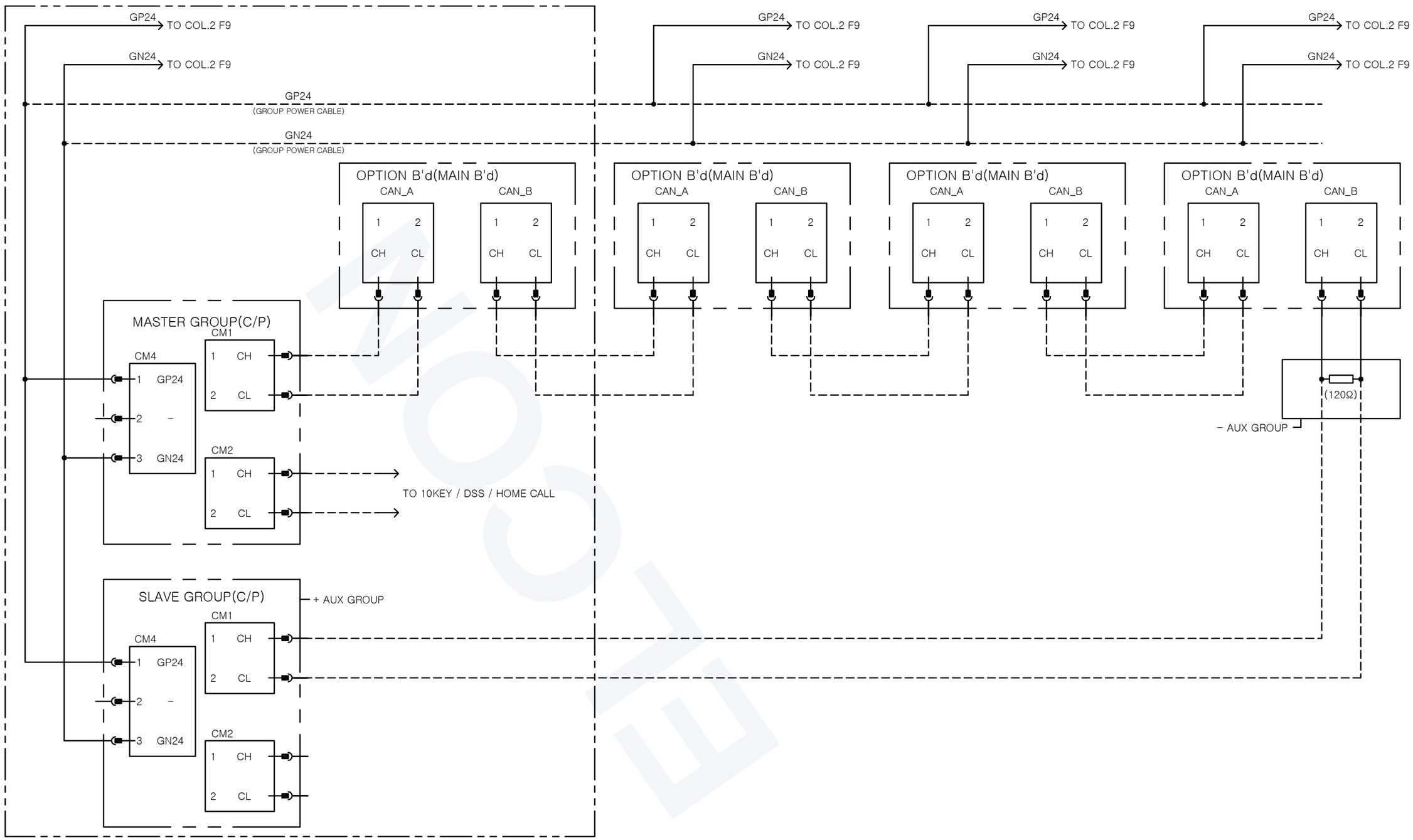

THIS DRAWING IS PROPRIETARY TO HELCO
NO PART OF THIS DRAWING MAY BE REPRODUCED
WITHOUT THE PERMISSION OF HELCO
허가없이 복사할 수 없음

배부처	

CHANGE 개정란

TOLERANCES—UNLESS OTHERWISE SPECIFIED

SIZE OVER	SIZE TO INCL.	TURN. PNCH'G DIST.OF HOLE STR.	MLDG. DIE CSTG. PRCN.CSTG DRAW.	SH.MET WELD GAS CTG.	CSTG. FORG.
1	4	± 0.1	± 0.2	± 0.3	± 0.5
4	16	± 0.2	± 0.3	± 0.5	± 0.7
16	63	± 0.3	± 0.4	± 0.7	± 0.9
63	250	± 0.4	± 0.6	± 1.2	± 1.3
250	500	± 0.6	± 0.8	± 1.5	± 1.8
500	1000	± 0.8	± 1.0	± 2.0	± 2.5
1000	2000	± 1.1	± 1.5	± 2.5	± 3.3
ANGLE		± 0.25°	± 0.5°	± 1.0°	± 2.0°

HYUNDAI ELEVATOR CO., LTD.

표 준	DRWN BY 제 도	DSND BY 설 계	CHKD BY 검 토	APPD BY 승 인
임 시 보 류	진 호 연		김주찬	심영석
	2012. 12. 03		01/31	01/31

UNIT 단위	MM	APPAR.	WBST1 & WBLX1 & WBSS1
SCALE 척도	N/S	TITLE 제 목	ELEM.W.DIAGRAM
3RD ANGLE 3 각 법			
REF. NO 참고도면		DWG. NO 도면번호	HE000517 1/1

HDW-91-003A

A3 (420mmx297MM)

ELCON · elcon.im

ELCON · elcon.im

DWG. NO 도면번호 HE000518 1/1

COL. 18 (OPTION 1)

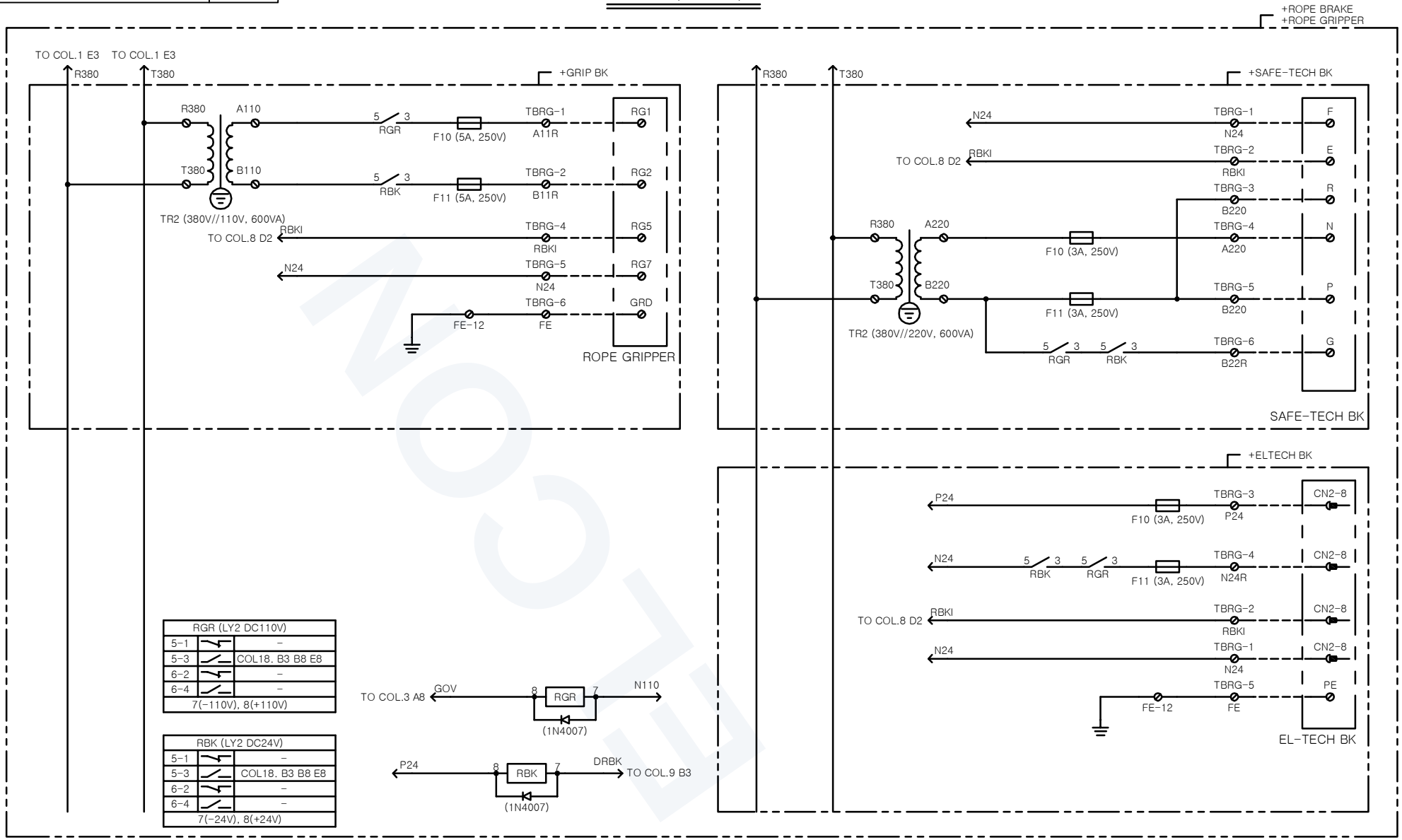

내부처	

CHANGE 개정란		
A1	COMPLETELY REVISED	2013. 04. 17 진 호 연
B1	CHANGE LY2 7, 8 PIN	2013. 04. 23 진 호 연
B2	ADDED BGM OPTION	

TOLERANCES–UNLESS OTHERWISE SPECIFIED

SIZE OVER	SIZE to INCL.	TURN. PNCH'G DIST.OF HOLE STR.	MLDG. DIE CSTG. PRCN.CSTG DRAW.	SH.MET WELD GAS CTG.	CSTG. FORG.
1	4	± 0.1	± 0.2	± 0.3	± 0.5
4	16	± 0.2	± 0.3	± 0.5	± 0.7
16	63	± 0.3	± 0.4	± 0.7	± 0.9
63	250	± 0.4	± 0.6	± 1.2	± 1.3
250	500	± 0.6	± 0.8	± 1.5	± 1.8
500	1000	± 0.8	± 1.0	± 2.0	± 2.5
1000	2000	± 1.1	± 1.5	± 2.5	± 3.3
ANGLE		± 0.25°	± 0.5°	± 1.0°	± 2.0°

HYUNDAI ELEVATOR CO., LTD.

	DRWN BY 제 도	DSND BY 설 계	CHKD BY 검 토	APPD BY 승 인
표 준				
임 시	진 호 연		김주찬	심영석
보 류				
	2012. 12. 03		01/31	01/31

UNIT 단위	MM	APPAR.	WBST1 & WBLX1 & WBSS1
SCALE 척도	N/S	TITLE 제 목	ELEM.W.DIAGRAM
3RD ANGLE 3 각 법			
REF. NO 참고도면		DWG. NO 도면번호	HE000518 1/1

HDW–91–003A

A3 (420mmx297MM)

THIS DRAWING IS PROPRIETARY TO HELCO
NO PART OF THIS DRAWING MAY BE REPRODUCED
WITHOUT THE PERMISSION OF HELCO
허가없이 복사할 수 없음

ELCON · elcon.im

ELCON · elcon.im

DWG. NO 도면번호 HE000519 1/1

COL. 19 (OPTION 2)

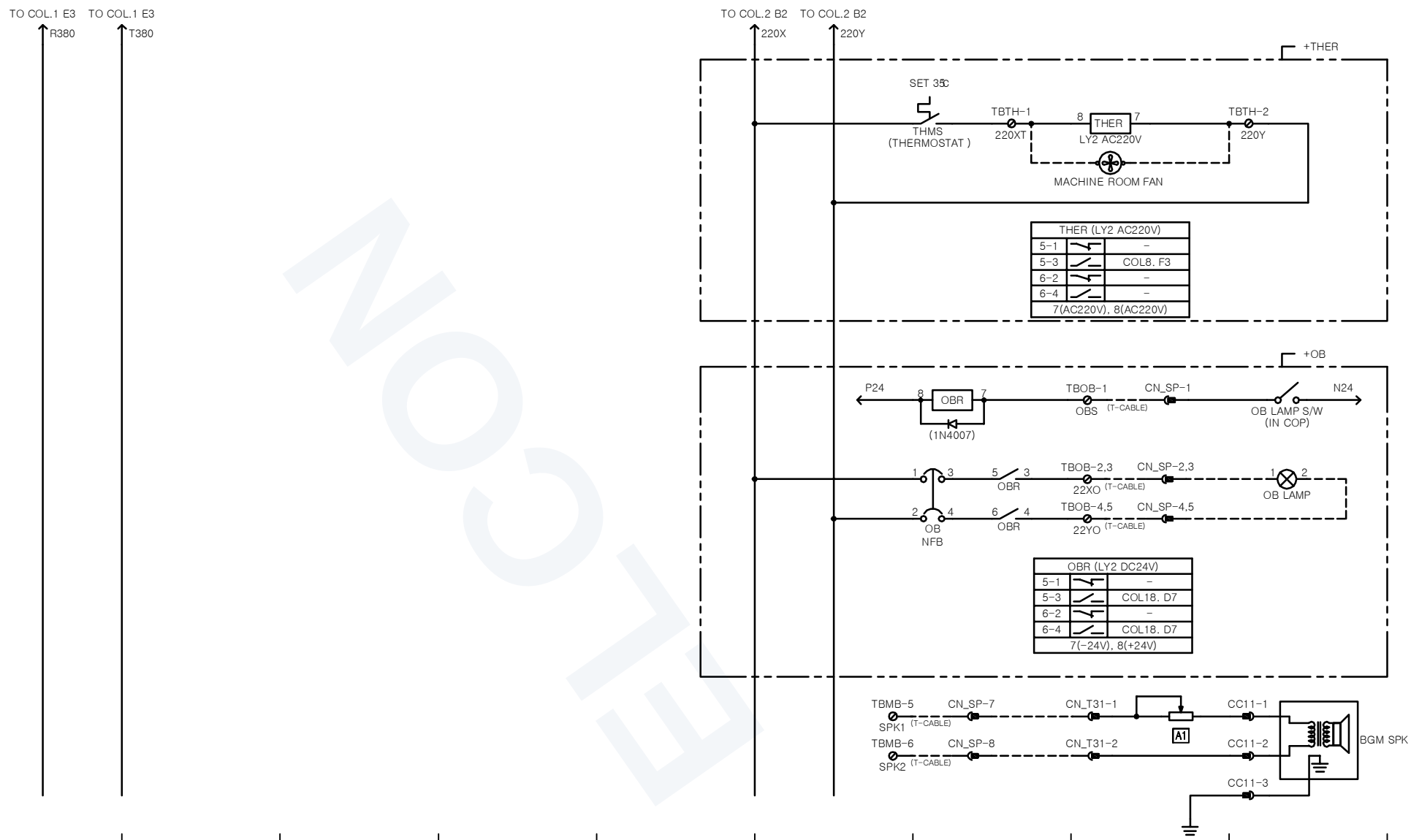

THIS DRAWING IS PROPRIETARY TO HELCO
NO PART OF THIS DRAWING MAY BE REPRODUCED
WITHOUT THE PERMISSION OF HELCO
허가없이 복사할 수 없음

배 부 처	

CHANGE 개정란	A1 WAS NOT ON	2013. 05. 03 진 호 연

TOLERANCES—UNLESS OTHERWISE SPECIFIED

SIZE (OVER / TO INCL.)	TURN. PNCH'G. DIST.OF HOLE STR.	MLDG. DIE CSTG. PRCN.CSTG DRAW.	SH.MET WELD GAS CTG.	CSTG. FORG.
1 / 4	± 0.1	± 0.2	± 0.3	± 0.5
4 / 16	± 0.2	± 0.3	± 0.5	± 0.7
16 / 63	± 0.3	± 0.4	± 0.7	± 0.9
63 / 250	± 0.4	± 0.6	± 1.2	± 1.3
250 / 500	± 0.6	± 0.8	± 1.5	± 1.8
500 / 1000	± 0.8	± 1.0	± 2.0	± 2.5
1000 / 2000	± 1.1	± 1.5	± 2.5	± 3.3
ANGLE	± 0.25°	± 0.5°	± 1.0°	± 2.0°

HYUNDAI ELEVATOR CO., LTD.

	DRWN BY 제 도	DSND BY 실 계	CHKD BY 검 토	APPD BY 승 인
표 준				
임 시	진 호 연		김주찬	심영석
보 류				
	2012. 12. 03		01/31	01/31

UNIT 단위	MM	APPAR.	WBST1 & WBLX1 & WBSS1
SCALE 척도	N/S	TITLE 제 목	ELEM.W.DIAGRAM
3RD ANGLE 3 각 법			
REF. NO 참고도면		DWG. NO 도면번호	HE000519 1/1

HDW-91-003A

A3 (420mmx297MM)

ELCON · elcon.im

ELCON · elcon.im

DWG. NO 도면번호 HE000520 1/1

COL. 20B (GOV TEST MRL)

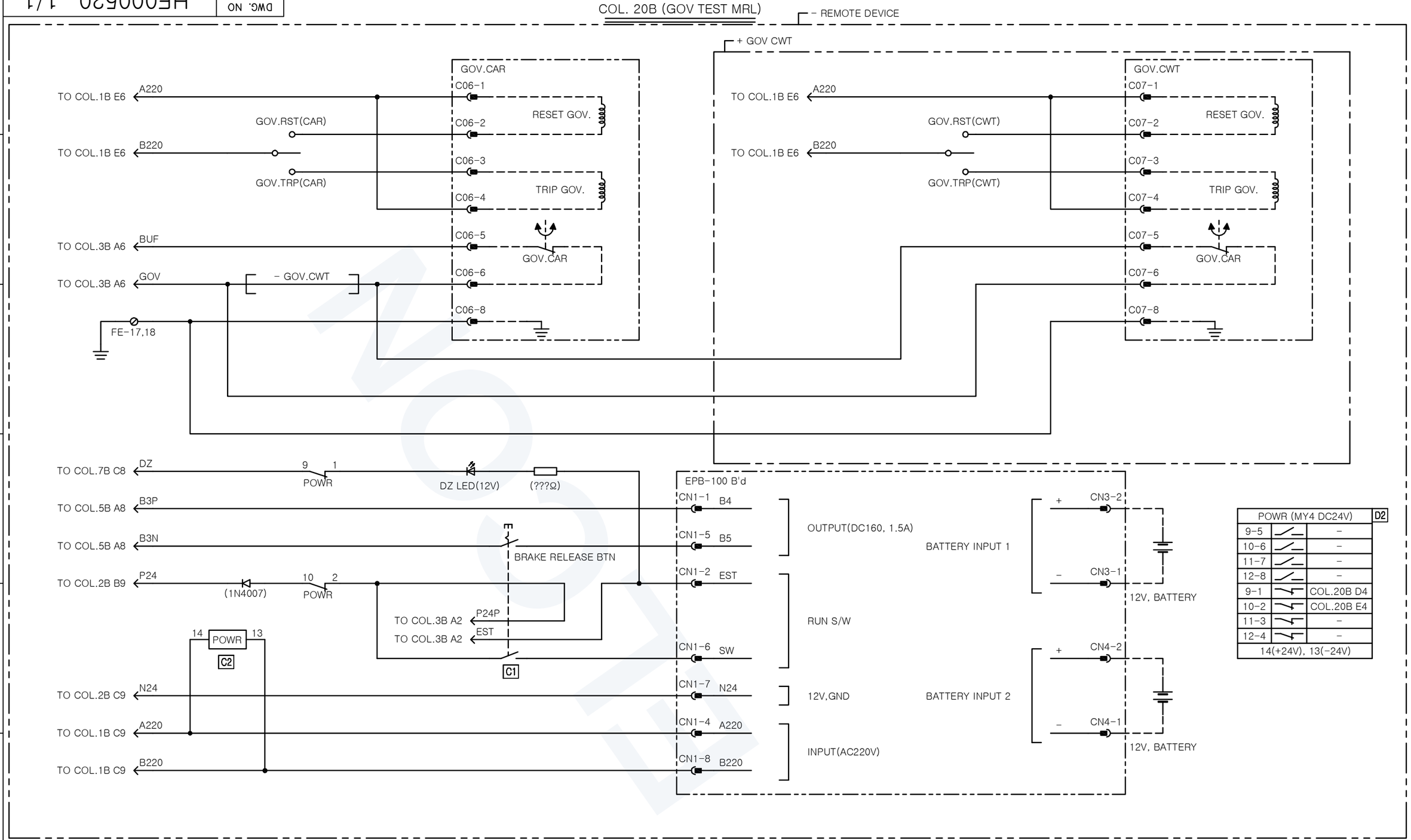

배부처	

CHANGE 개정란		
A1	COMPLETELY REVISED	2013. 04. 17 진 호 연
B1	WAS POWR(G2R)	2013. 05. 09 진 호 연
C1	MOVED BRAKE RELEASE BTN CONTACT	2013. 05. 09 진 호 연
C2	WAS LY2 DC24V	2013. 05. 13 진 호 연

TOLERANCES—UNLESS OTHERWISE SPECIFIED

SIZE OVER	SIZE TO INCL.	TURN. PNCH'G DIST.OF HOLE STR.	MLDG. DIE CSTG. PRCN.CSTG DRAW.	SH.MET WELD GAS CTG.	CSTG. FORG.
1	4	± 0.1	± 0.2	± 0.3	± 0.5
4	16	± 0.2	± 0.3	± 0.5	± 0.7
16	63	± 0.3	± 0.4	± 0.7	± 0.9
63	250	± 0.4	± 0.6	± 1.2	± 1.3
250	500	± 0.6	± 0.8	± 1.5	± 1.8
500	1000	± 0.8	± 1.0	± 2.0	± 2.5
1000	2000	± 1.1	± 1.5	± 2.5	± 3.3
ANGLE		± 0.25°	± 0.5°	± 1.0°	± 2.0°

HYUNDAI ELEVATOR CO., LTD.

표 준 / 임 시 / 보 류	DRWN BY 제 도	DSND BY 설 계	CHKD BY 검 토	APPD BY 승 인
	진 호 연		김주찬	심영석
	2012. 12. 03		01/31	01/31

UNIT 단위	MM	APPAR.	WBSS1
SCALE 척도	N/S	TITLE 제 목	ELEM.W.DIAGRAM
3RD ANGLE 3 각 법			
REF. NO 참고도면		DWG. NO 도면번호	HE000520 1/1

THIS DRAWING IS PROPRIETARY TO HELCO
NO PART OF THIS DRAWING MAY BE REPRODUCED
WITHOUT THE PERMISSION OF HELCO
허가없이 복사할 수 없음

HDW-91-003A A3 (420mmx297MM)

ELCON · elcon.im

ELCON · elcon.im

DWG. NO 도면번호 HE000521 1/1

COL. 21B (GOV TEST MRL)

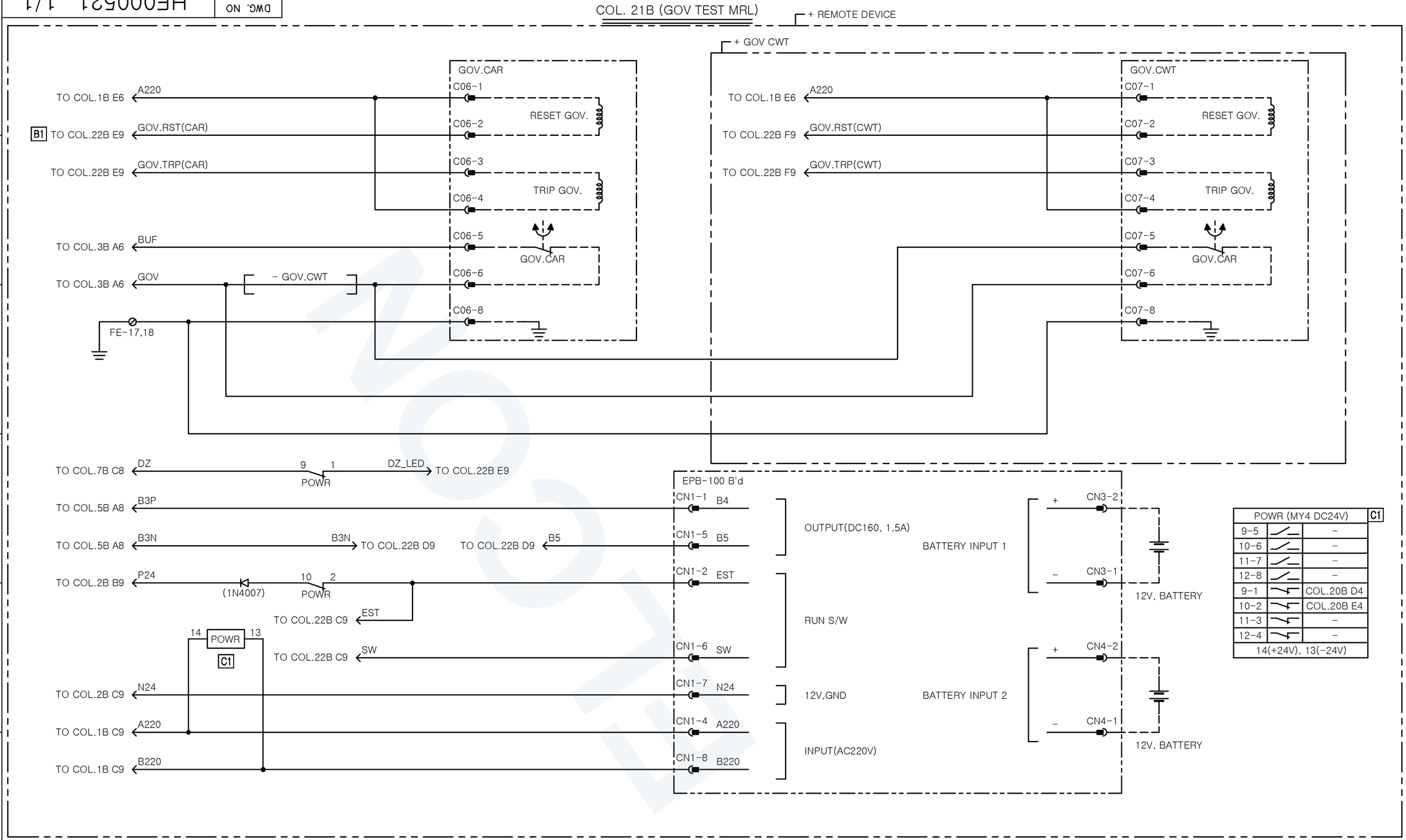

THIS DRAWING IS PROPRIETARY TO HELCO
NO PART OF THIS DRAWING MAY BE REPRODUCED
WITHOUT THE PERMISSION OF HELCO
허가없이 복사할 수 없음

배부처	

CHANGE 개정란		
A1	COMPLETELY REVISED	2013. 04. 17 진 호 연 A
B1	WAS POWR(G2R)	2013. 05. 09 진 호 연 B
B2	WAS COL. 21B	
C1	WAS LY2 DC24V	2013. 05. 13 진 호 연 C

TOLERANCES—UNLESS OTHERWISE SPECIFIED

SIZE OVER	SIZE TO INCL.	TURN. PNCH'G DIST.OF HOLE STR.	MLDG. DIE CSTG. PRCN.CSTG DRAW.	SH.MET WELD GAS CTG.	CSTG. FORG.
1	4	± 0.1	± 0.2	± 0.3	± 0.5
4	16	± 0.2	± 0.3	± 0.5	± 0.7
16	63	± 0.3	± 0.4	± 0.7	± 0.9
63	250	± 0.4	± 0.6	± 1.2	± 1.3
250	500	± 0.6	± 0.8	± 1.5	± 1.8
500	1000	± 0.8	± 1.0	± 2.0	± 2.5
1000	2000	± 1.1	± 1.5	± 2.5	± 3.3
ANGLE		± 0.25°	± 0.5°	± 1.0°	± 2.0°

HYUNDAI ELEVATOR CO., LTD.

	DRWN BY 제 도	DSND BY 설 계	CHKD BY 검 토	APPD BY 승 인
표 준	진 호 연		김주찬	심영석
임 시				
보 류				
	2012. 12. 03		01/31	01/31

UNIT 단위	MM	APPAR.	WBSS1
SCALE 척도	N/S	TITLE 제 목	ELEM.W.DIAGRAM
3RD ANGLE 3 각 법			
REF. NO 참고도면		DWG. NO 도면번호	HE000521 1/1

HDW-91-003A

A3 (420mmx297MM)

ELCON · elcon.im

ELCON · elcon.im

DWG. NO 도면번호 HE000522 1/1

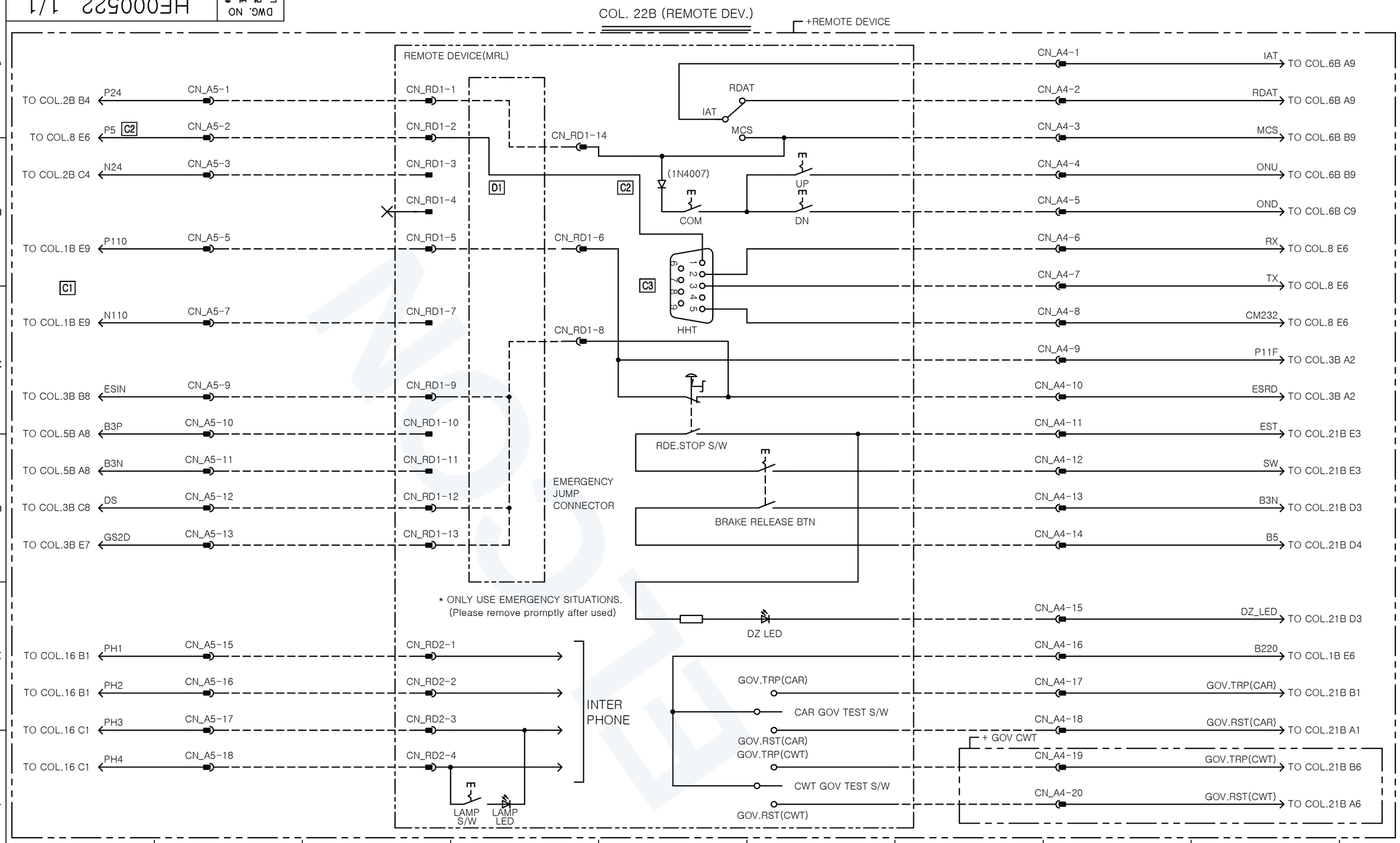

THIS DRAWING IS PROPRIETARY TO HELCO
NO PART OF THIS DRAWING MAY BE REPRODUCED
WITHOUT THE PERMISSION OF HELCO
허가없이 복사할 수 없음

배부처	

A1	COMPLETELY REVISED	2013. 04. 17 진 호 연	A
B1	CHANGE JUMPER CABLE		B
B2	CHANGE CN_A5-14~117	2013. 04. 23 진 호 연	B
C1	WAS COL.1B B9		C
C2	WAS NOT ON		C
C3	REMOVED P24,N24 LINE	2013. 05. 07 진 호 연	C
D1	WAS WIRED RD1-3	2013. 05. 13 진 호 연	D

CHANGE 개정란

TOLERANCES—UNLESS OTHERWISE SPECIFIED

WORK / SIZE OVER	TO INCL.	TURN. PNCH'G DIST.OF HOLE STR.	MLDG. DIE CSTG. PRCN.CSTG DRAW.	SH.MET WELD GAS CTG.	CSTG. FORG.
1	4	± 0.1	± 0.2	± 0.3	± 0.5
4	16	± 0.2	± 0.3	± 0.5	± 0.7
16	63	± 0.3	± 0.4	± 0.7	± 0.9
63	250	± 0.4	± 0.6	± 1.2	± 1.3
250	500	± 0.6	± 0.8	± 1.5	± 1.8
500	1000	± 0.8	± 1.0	± 2.0	± 2.5
1000	2000	± 1.1	± 1.5	± 2.5	± 3.3
ANGLE		± 0.25°	± 0.5°	± 1.0°	± 2.0°

HYUNDAI ELEVATOR CO., LTD.

	DRWN BY 제 도	DSND BY 설 계	CHKD BY 검 토	APPD BY 승 인
표 준				
임 시	진 호 연		김주찬	심영석
보 류				
	2012. 12. 03		01/31	01/31

UNIT 단위	MM	APPAR.	WBSS1
SCALE 척도	N/S	TITLE 제 목	ELEM.W.DIAGRAM
3RD ANGLE 3 각 법			
REF. NO 참고도면		DWG. NO 도면번호	HE000522 1/1

HDW-91-003A

A3 (420mmx297MM)

ELCON · elcon.im

ELCON · elcon.im

DWG. NO 도면번호 HE000523 1/1

COL. 23B (MRL LAMP)

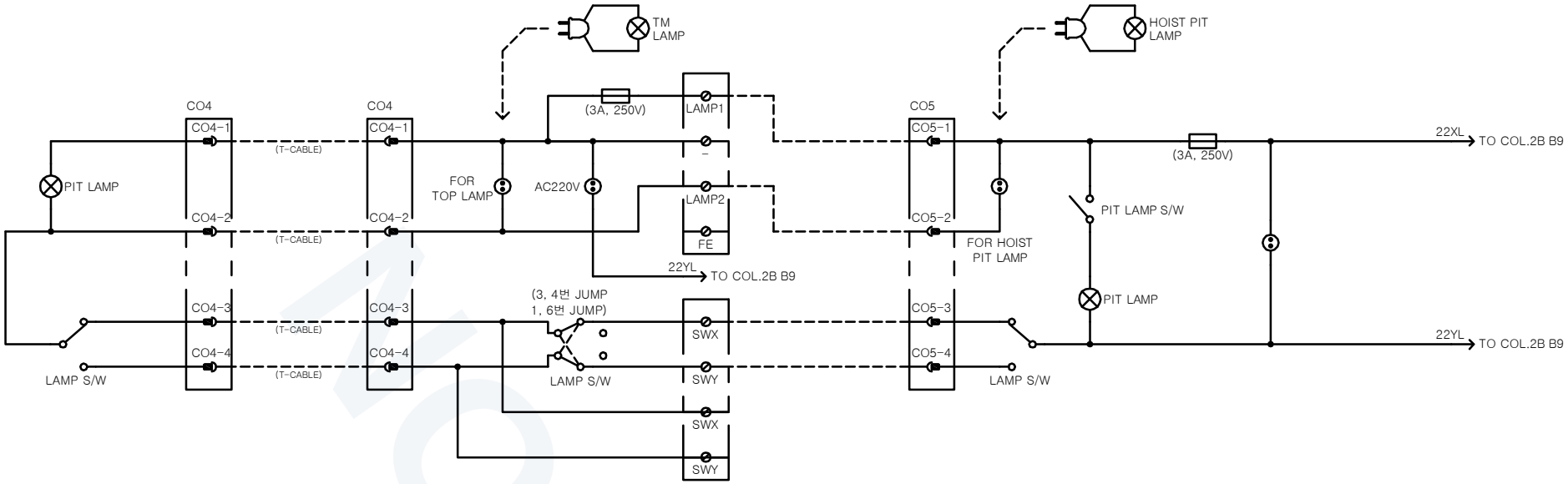

THIS DRAWING IS PROPRIETARY TO HELCO
NO PART OF THIS DRAWING MAY BE REPRODUCED
WITHOUT THE PERMISSION OF HELCO
허가없이 복사할 수 없음

내부처	

CHANGE 개정란

TOLERANCES–UNLESS OTHERWISE SPECIFIED

SIZE (OVER)	SIZE (TO INCL)	TURN. PNCH'G DIST.OF HOLE STR.	MLDG. DIE CSTG. PRCN.CSTG DRAW.	SH.MET WELD GAS CTG.	CSTG. FORG.
1	4	± 0.1	± 0.2	± 0.3	± 0.5
4	16	± 0.2	± 0.3	± 0.5	± 0.7
16	63	± 0.3	± 0.4	± 0.7	± 0.9
63	250	± 0.4	± 0.6	± 1.2	± 1.3
250	500	± 0.6	± 0.8	± 1.5	± 1.8
500	1000	± 0.8	± 1.0	± 2.0	± 2.5
1000	2000	± 1.1	± 1.5	± 2.5	± 3.3
ANGLE		± 0.25°	± 0.5°	± 1.0°	± 2.0°

HYUNDAI ELEVATOR CO., LTD.

	DRWN BY 제 도	DSND BY 설 계	CHKD BY 검 토	APPD BY 승 인
표 준				
임 시	진 호 연		김주찬	심영석
보 류				
	2012.	12. 03	01/31	01/31

UNIT 단위	MM	APPAR.	WBSS1
SCALE 척도	N/S	TITLE 제 목	ELEM.W.DIAGRAM
3RD ANGLE 3 각 법			
REF. NO 참고도면		DWG. NO 도면번호	HE000523 1/1

HDW–91–003A

A3 (420mmx297MM)

ELCON · elcon.im

ELCON · elcon.im

DWG. NO 도면번호 HE000524 1/1

COL. 24 (EMP ELD)

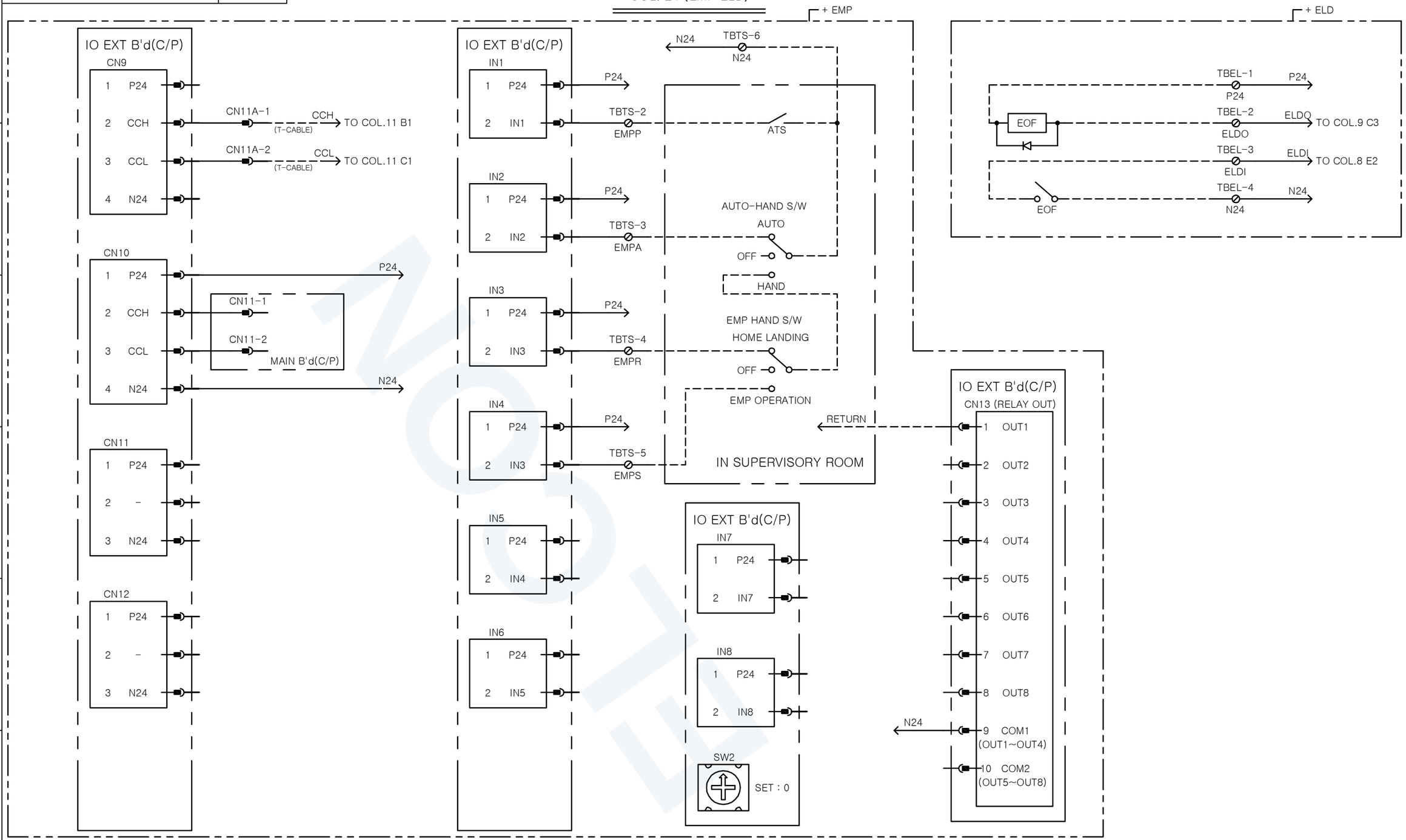

THIS DRAWING IS PROPRIETARY TO HELCO
NO PART OF THIS DRAWING MAY BE REPRODUCED
WITHOUT THE PERMISSION OF HELCO
허가없이 복사할 수 없음

배부처	

CHANGE 개정란

TOLERANCES—UNLESS OTHERWISE SPECIFIED

SIZE OVER	SIZE TO INCL.	TURN. PNCH'G DIST.OF HOLE STR.	MLDG. DIE CSTG. PRCN.CSTG DRAW.	SH.MET WELD GAS CTG.	CSTG. FORG.
1	4	± 0.1	± 0.2	± 0.3	± 0.5
4	16	± 0.2	± 0.3	± 0.5	± 0.7
16	63	± 0.3	± 0.4	± 0.7	± 0.9
63	250	± 0.4	± 0.6	± 1.2	± 1.3
250	500	± 0.6	± 0.8	± 1.5	± 1.8
500	1000	± 0.8	± 1.0	± 2.0	± 2.5
1000	2000	± 1.1	± 1.5	± 2.5	± 3.3
ANGLE		± 0.25°	± 0.5°	± 1.0°	± 2.0°

HYUNDAI ELEVATOR CO., LTD.

	DRWN BY 제 도	DSND BY 설 계	CHKD BY 검 토	APPD BY 승 인
표 준				
임 시	진 호 연		김주찬	심영석
보 류				
	2013.	05. 06	05/06	05/06

UNIT 단위	MM	APPAR.	WBST1, WBLX1, WBSS1
SCALE 척도	N/S	TITLE 제 목	ELEM.W.DIAGRAM
3RD ANGLE 3 각 법			
REF. NO 참고도면		DWG. NO 도면번호	HE000524 1/1

HDW-91-003A

A3 (420mmx297MM)

ELCON · elcon.im

ELCON · elcon.im

DWG. NO 도면번호 HE000525 1/1

COL. 25 (INSTALL REMOTE)

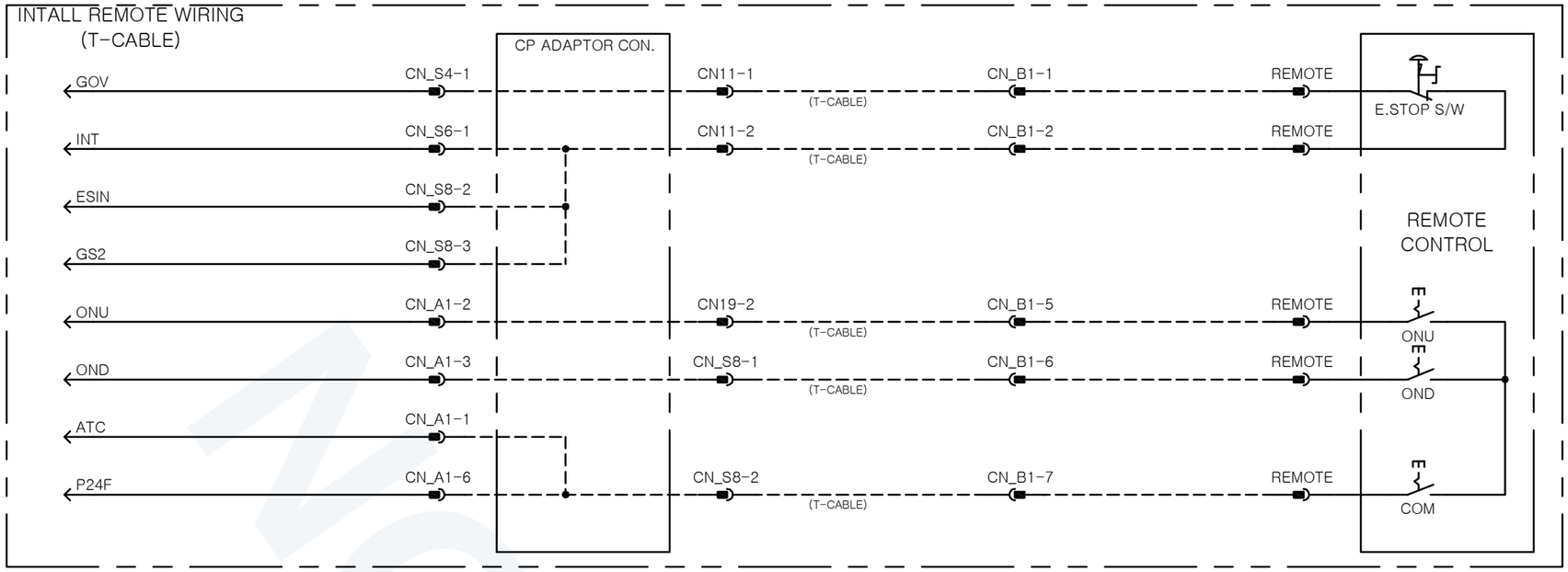

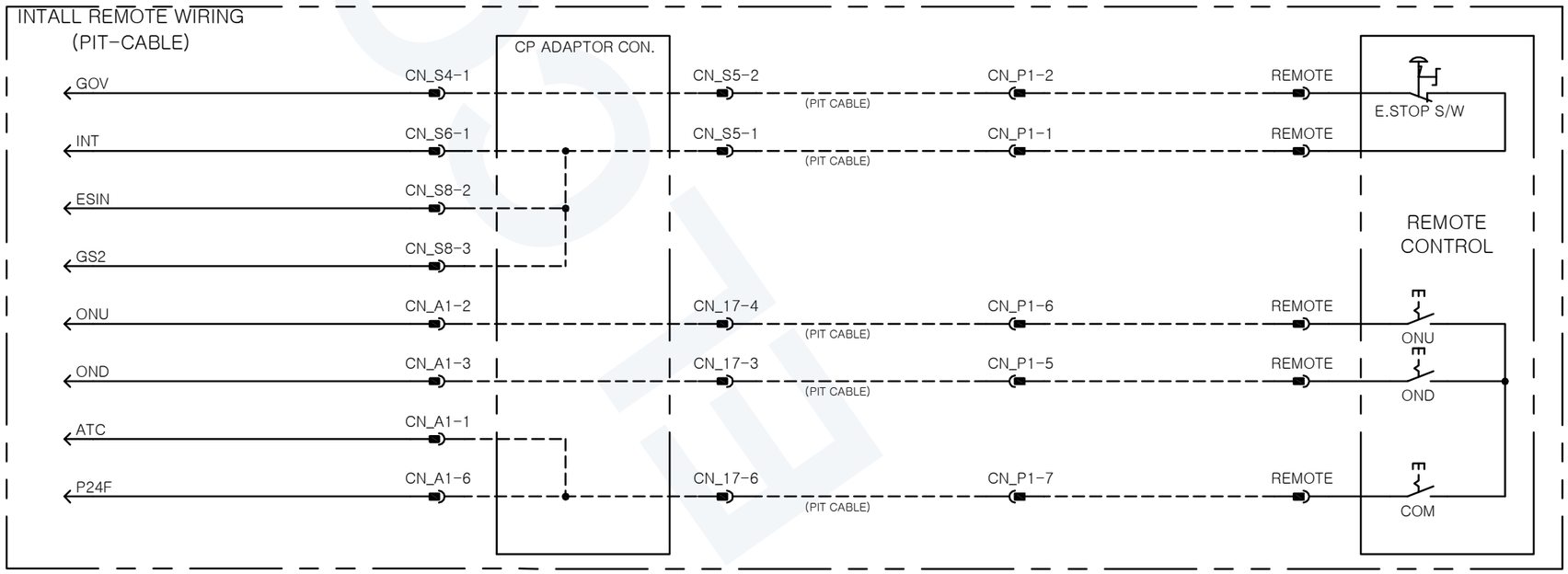

THIS DRAWING IS PROPRIETARY TO HELCO
NO PART OF THIS DRAWING MAY BE REPRODUCED
WITHOUT THE PERMISSION OF HELCO
허가없이 복사할 수 없음

배 부 처	

A	CHANGE 개 정 란	
A1	COMPLETELY REVISED	2013. 05. 13 진 호 연

TOLERANCES—UNLESS OTHERWISE SPECIFIED

SIZE OVER	SIZE TO INCL.	TURN. PNCH'G DIST.OF HOLE STR.	MLDG. DIE CSTG. PRCN.CSTG DRAW.	SH.MET WELD GAS CTG.	CSTG. FORG.
1	4	± 0.1	± 0.2	± 0.3	± 0.5
4	16	± 0.2	± 0.3	± 0.5	± 0.7
16	63	± 0.3	± 0.4	± 0.7	± 0.9
63	250	± 0.4	± 0.6	± 1.2	± 1.3
250	500	± 0.6	± 0.8	± 1.5	± 1.8
500	1000	± 0.8	± 1.0	± 2.0	± 2.5
1000	2000	± 1.1	± 1.5	± 2.5	± 3.3
ANGLE		± 0.25°	± 0.5°	± 1.0°	± 2.0°

HYUNDAI ELEVATOR CO., LTD.

	DRWN BY 제 도	DSND BY 설 계	CHKD BY 검 토	APPD BY 승 인
표 준				
임 시	진 호 연		김주찬	심영석
보 류				
	2013.	05. 06	05/06	05/06

UNIT 단위	MM	APPAR.	WBSS1
SCALE 척도	N/S	TITLE 제 목	ELEM.W.DIAGRAM
3RD ANGLE 3 각 법			
REF. NO 참고도면		DWG. NO 도면번호	HE000525 1/1

HDW-91-003A

A3 (420mmx297MM)

ELCON · elcon.im

ELCON · elcon.im

HE000526 1/1 DWG. NO 도면번호

COL. 26 (LIMIT LENGTH)

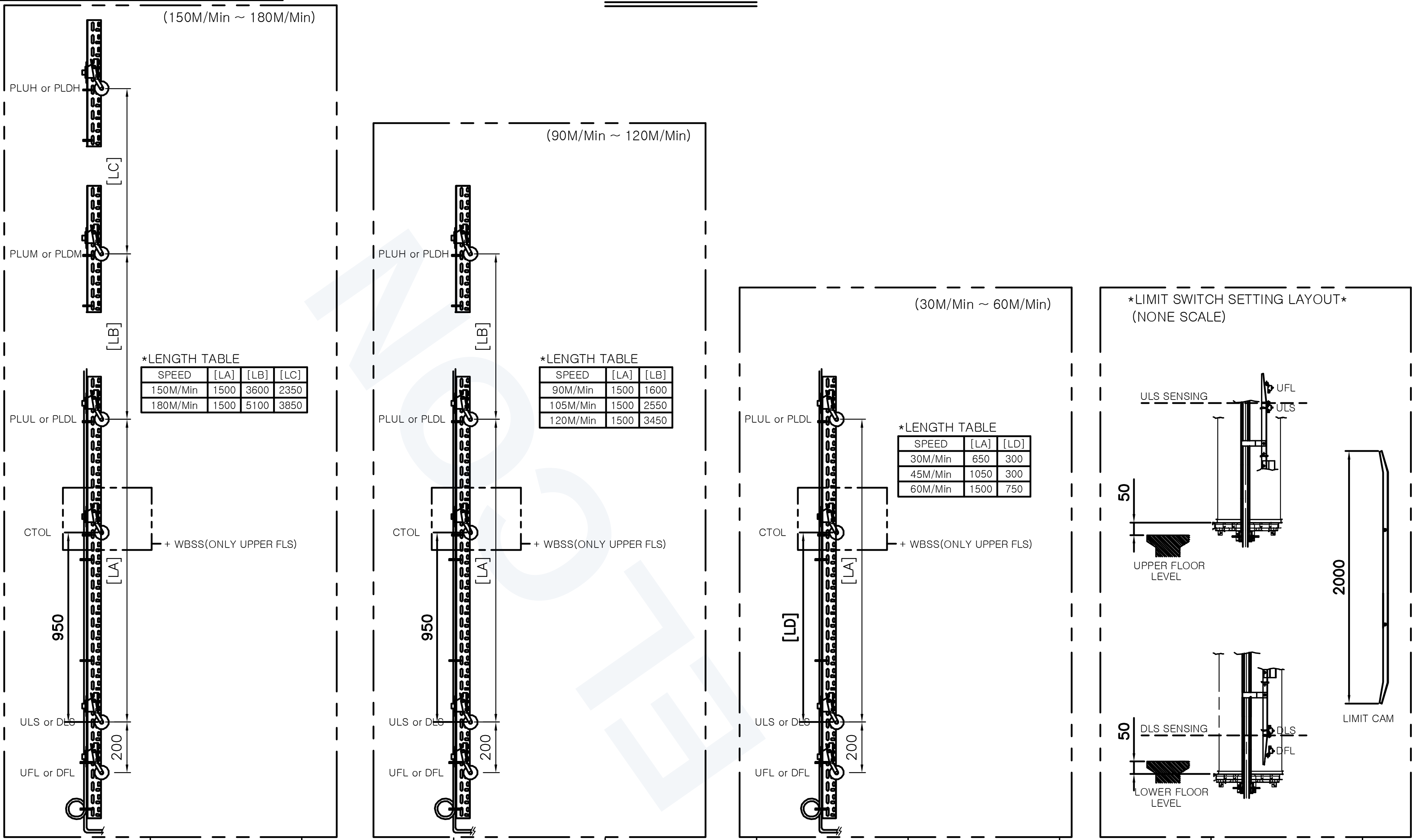

*LENGTH TABLE (150M/Min ~ 180M/Min)

SPEED	[LA]	[LB]	[LC]
150M/Min	1500	3600	2350
180M/Min	1500	5100	3850

*LENGTH TABLE (90M/Min ~ 120M/Min)

SPEED	[LA]	[LB]
90M/Min	1500	1600
105M/Min	1500	2550
120M/Min	1500	3450

*LENGTH TABLE (30M/Min ~ 60M/Min)

SPEED	[LA]	[LD]
30M/Min	650	300
45M/Min	1050	300
60M/Min	1500	750

THIS DRAWING IS PROPRIETARY TO HELCO
NO PART OF THIS DRAWING MAY BE REPRODUCED
WITHOUT THE PERMISSION OF HELCO
허가없이 복사할 수 없음

배부처

CHANGE 개정란: A1 COMPLETELY REVISED 2013. 04. 22 진호연

TOLERANCES–UNLESS OTHERWISE SPECIFIED

SIZE OVER	SIZE TO INCL.	TURN. PNCH'G DIST.OF HOLE STR.	MLDG. DIE CSTG. PRCN.CSTG DRAW.	SH.MET WELD GAS CTG.	CSTG. FORG.
1	4	± 0.1	± 0.2	± 0.3	± 0.5
4	16	± 0.2	± 0.3	± 0.5	± 0.7
16	63	± 0.3	± 0.4	± 0.7	± 0.9
63	250	± 0.4	± 0.6	± 1.2	± 1.3
250	500	± 0.6	± 0.8	± 1.5	± 1.8
500	1000	± 0.8	± 1.0	± 2.0	± 2.5
1000	2000	± 1.1	± 1.5	± 2.5	± 3.3
ANGLE		± 0.25°	± 0.5°	± 1.0°	± 2.0°

HYUNDAI ELEVATOR CO., LTD.

표준 / 임시 / 보류	DRWN BY 제도	DSND BY 설계	CHKD BY 검토	APPD BY 승인
	진호연		김주찬	심영석
	2012. 12. 03		01/31	01/31

UNIT 단위	MM
SCALE 척도	1:15
3RD ANGLE 3각법	
REF. NO 참고도면	
APPAR.	WBST1, WBLX1, WBSS1
TITLE 제목	ELEM.W.DIAGRAM
DWG. NO 도면번호	HE000526 1/1

HDW-91-003A

A3 (420mmx297MM)

ELCON · elcon.im

ELCON · elcon.im

DWG. NO 도면번호 HE000527 1/1

COL. 27 (CONNECTOR)

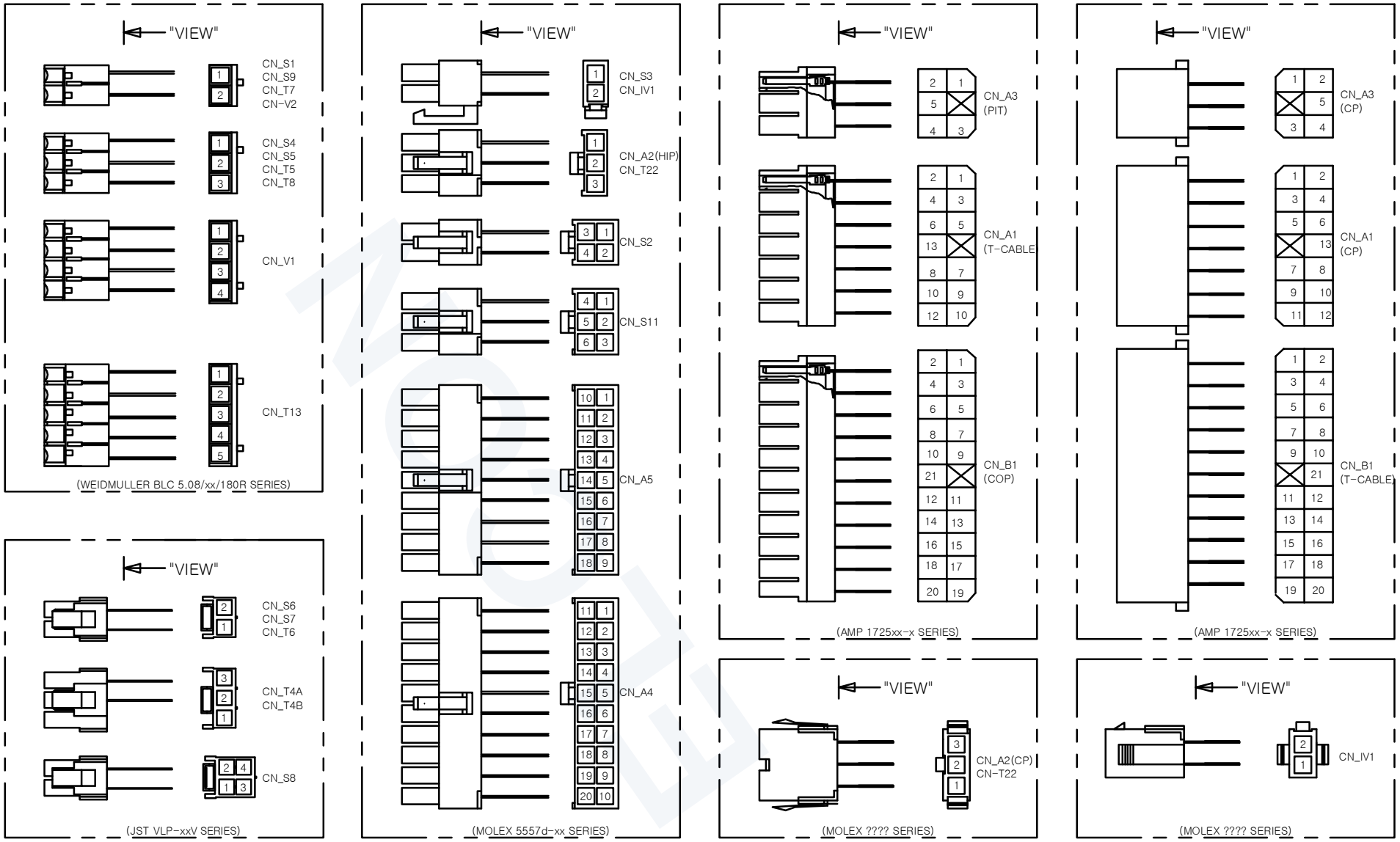

THIS DRAWING IS PROPRIETARY TO HELCO
NO PART OF THIS DRAWING MAY BE REPRODUCED
WITHOUT THE PERMISSION OF HELCO
허가없이 복사할 수 없음

내 부 처	

CHANGE 개정란

TOLERANCES-UNLESS OTHERWISE SPECIFIED

SIZE (OVER)	SIZE (TO INCL)	TURN. PNCH'G DIST.OF HOLE STR.	MLDG. DIE CSTG. PRCN.CSTG DRAW.	SH.MET WELD GAS CTG.	CSTG. FORG.
1	4	± 0.1	± 0.2	± 0.3	± 0.5
4	16	± 0.2	± 0.3	± 0.5	± 0.7
16	63	± 0.3	± 0.4	± 0.7	± 0.9
63	250	± 0.4	± 0.6	± 1.2	± 1.3
250	500	± 0.6	± 0.8	± 1.5	± 1.8
500	1000	± 0.8	± 1.0	± 2.0	± 2.5
1000	2000	± 1.1	± 1.5	± 2.5	± 3.3
ANGLE		± 0.25°	± 0.5°	± 1.0°	± 2.0°

HYUNDAI ELEVATOR CO., LTD.

	DRWN BY 제 도	DSND BY 설 계	CHKD BY 검 토	APPD BY 승 인
표 준				
임 시	진 호 연		김주찬	심영석
보 류				
	2012. 12. 03		01/31	01/31

UNIT 단위	MM	APPAR.	WBST1 & WBLX1 & WBSS1
SCALE 척도	N/S	TITLE 제 목	ELEM.W.DIAGRAM
3RD ANGLE 3 각 법			
REF. NO 참고도면		DWG. NO 도면번호	HE000527 1/1

HDW-91-003A

A3 (420mmx297MM)

ELCON · elcon.im

ELCON · elcon.im

DWG. NO 도면번호 HE000528 1/1

COL. 28 (CONNECTOR)

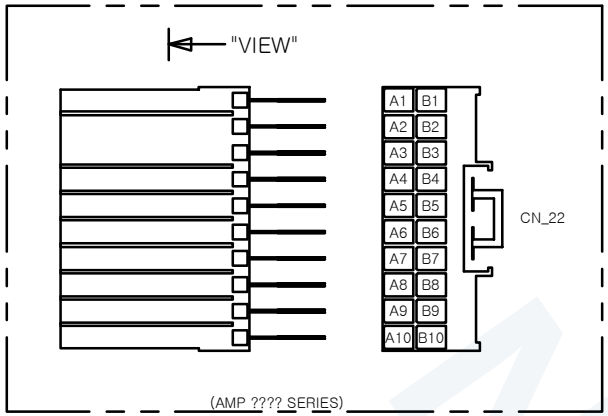

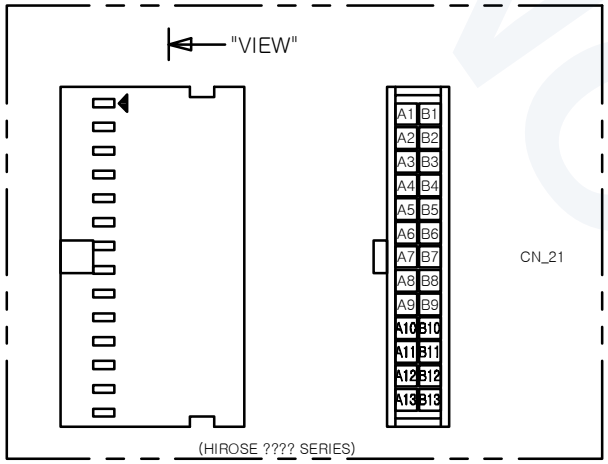

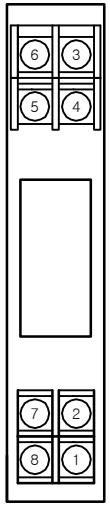

G2R RELAY SOCKET

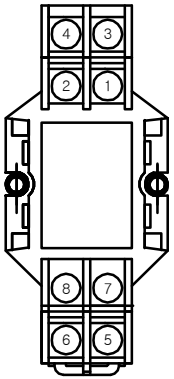

LY2 RELAY SOCKET

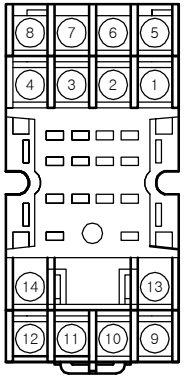

MY4 RELAY SOCKET

THIS DRAWING IS PROPRIETARY TO HELCO
NO PART OF THIS DRAWING MAY BE REPRODUCED
WITHOUT THE PERMISSION OF HELCO
허가없이 복사할 수 없음

내 부 치	

CHANGE 개정란

TOLERANCES–UNLESS OTHERWISE SPECIFIED

SIZE OVER	SIZE TO INCL.	TURN. PNCH'G DIST. OF HOLE STR.	MLDG. DIE CSTG. PRCN.CSTG DRAW.	SH.MET WELD GAS CTG.	CSTG. FORG.
1	4	± 0.1	± 0.2	± 0.3	± 0.5
4	16	± 0.2	± 0.3	± 0.5	± 0.7
16	63	± 0.3	± 0.4	± 0.7	± 0.9
63	250	± 0.4	± 0.6	± 1.2	± 1.3
250	500	± 0.6	± 0.8	± 1.5	± 1.8
500	1000	± 0.8	± 1.0	± 2.0	± 2.5
1000	2000	± 1.1	± 1.5	± 2.5	± 3.3
ANGLE		± 0.25°	± 0.5°	± 1.0°	± 2.0°

HYUNDAI ELEVATOR CO., LTD.

	DRWN BY 제 도	DSND BY 설 계	CHKD BY 검 토	APPD BY 승 인
표 준	진 호 연		김주찬	심영석
임 시				
보 류				
	2012. 12. 03		01/31	01/31

UNIT 단위	MM	APPAR.	WBST1 & WBLX1 & WBSS1
SCALE 척도	N/S	TITLE 제 목	ELEM.W.DIAGRAM
3RD ANGLE 3 각 법			
REF. NO 참고도면		DWG. NO 도면번호	HE000528 1/1

HDW–91–003A

A3 (420mmx297MM)

ELCON · elcon.im

DWG. NO 도면번호 HE000529 1/1

COL. 29 (SIGNAL TABLE)

MACHINE ROOM PART(MAIN BOARD, SAF BOARD, PWR BOARD, VCON BOARD)

MAIN BOARD

CN_1(PG)

1	PGP
2	PGM
3	PA
4	PB
5	SHIELD

CN_11(TC)

1	CCH
2	CCL

CN_12(HIP)

1	HCH
2	HCL

CN_14(HRTS)

2	RX232
3	TX232
5	CM232

CN_15

1	H485
2	L485

CN_16(HHT)

1	P5
2	RX232
3	TX232
4	CM232
6	–
9	–

CN_17

1	ULS
2	PLUL
3	PLUM
4	PLUH
5	PLUH2
6	N24

CN_18

1	DLS
2	PLDL
3	PLDM
4	PLDH
5	PLDH2
6	N24

CN_19(TC)

1	XUL
2	XDL
3	XDZ1
4	XDZ2

CN_20(SAF)

1	XESCP
2	XBUF
3	XGOV
4	XUFL
5	XDFL
6	XGS
7	XDS

CN_21

A1	XAT	B7	XEQS
B1	XMCS	A8	XEQP
A2	XUCM	B8	XELDI
B2	XMU	A9	XTHS
A3	XMD	B9	XFMR2
B3	XSA	A10	XCCS
A4	XMC2	B10	XSP1
B4	XBKAS	A11	XCTOL
A5	XBKBS	B11	XSP3
B5	XBKAC	A12	XSP4
A6	XMTH	B12	–
B6	XRBL	A13	–
A7	XRBKI	B13	–

CN_22

A1	DMC2	B1	DSP1
A2	DBKA	B2	DSP2
A3	DBKB	B3	DSP3
A4	DBKP	B4	DSP4
A5	DRBK	B5	–
A6	DIFAN	B6	–
A7	DX	B7	–
A8	–	B8	N110
A9	DELDE	B9	P24
A10	DSAFE	B10	N24

CN_14

1	D1
2	D2

SAF BOARD

CN_S1(CP)

1	P110F
2	ESCP

CN_S2(PIT)

1	ESCP
2	BUF
3	PITS
4	FE

CN_S3(GOV)

1	BUF
2	GOV

CN_S4(UFL)

1	GOV
2	UFL
3	FE

CN_S5(DFL)

1	UFL
2	DFL
3	FE

CN_S6(LD)

1	DS
2	FE

CN_S7(LD)

1	DSIN
2	FE

CN_S8(TC)

1	DFL
2	ESIN
3	GS2
4	SAFT

CN_S9(EMG)

1	PITS
2	SAFT

CN_S11

1	P110
2	MC2P
3	N24
4	N110
5	MCBK
6	P24

CN_S12

1	DX
2	XDZC
3	XSA

CN_S13

1	XESCP
2	XBUF
3	XGOV
4	XUFL
5	XDFL
6	XGS
7	XDS

CN_S14

1	P110
2	ESIN
3	DS
4	GS2D
5	DZ1

CN_S19A(TC)

1	UL
2	DL
3	DZ1
4	DZ2

CN_S19B(CP)

1	UL
2	DL
3	DZ1
4	DZ2

PWR BOARD

CN_CP1(TR)

1	A150B
2	B150
3	A85B
4	B85

CN_CP3(TR)

1	A85B
	–
2	B85

CN_CP2(BK)

1	P160
2	N160

CN_CP4(SAF)

1	P110
	–
2	N110
	–
3	N110

TBMA

1	MTH
2	N24
3	BSP
4	BOP
5	B3P
6	B3N

TBMB (B3)

1	BUF
2	GOV
3	GP24
4	GN24
5	SPK1
6	SPK2

TBMC

1	A220
2	B220
3	22YL
4	CTOL
5	RNBY
6	N24

TBPW

1	P24
2	P24
3	P24
4	N24
5	N24
6	N24

CN_A1(TC)

1	ATC
2	ONU
3	OND
4	PH1
5	PH2
6	P24F
7	N24
8	
9	A220
10	B220
11	22X
12	22Y
13	

CN_A2(HIP)

1	P24
2	N24
3	FE

CN_A3(PIT)

1	P24
2	N24
3	CCS
4	22X
5	22Y

C06

1	A220
2	GOV.RST
3	GOV.TRP
4	A220
5	BUF
6	GOV
7	–
8	FE

C07

1	A220
2	GOV.RST
3	GOV.TRP
4	A220
5	BUF
6	GOV
7	–
8	FE

CN_IV1

1	IFAN
2	B220

CN_A4 C3

1	IAT	11	EST
2	RDAT	12	SW
3	MCS	13	B3N
4	ONU	14	B5
5	OND	15	DZ_LED
6	RX	16	B220
7	TX	17	TRP(CAR)
8	CM232	18	RST(CAR)
9	P11F	19	TRP(CWT)
10	ESRD	20	RST(CWT)

CN_A5 C3

1	P24	10	B3P
2	–	11	B3N
3	N24	12	DS
4	–	13	GS2D
5	P110	14	–
6	–	15	PH1
7	N110	16	PH2
8	–	17	PH3
9	ESIN	18	PH4

TBTM

1	U
2	V
3	W

VCON BOARD

CN_V1()

1	A22B
2	B22
3	P24
4	DBKB

CN_V3()

1	A85B
2	–
3	B85

CN_V2()

1	P160
2	N160

CN_V4()

1	P110
2	–
3	N110
4	–
5	N110

TBPH

1	PH1
2	PH2
3	PH3
4	PH4

CN_X1

1	P24
2	N24
3	DBZ

BUS BAR

NO.	ITEM	NOTE
FE-1	Field INPUT	Field
FE-2	INV	C/P
FE-3	SAB	
FE-4	FLT1	
FE-5	FLT2	
FE-6	TR1	
FE-7	RCT1	
FE-8	PS1	
FE-9	SAF	
FE-10	CN_A2-3	
FE-11	N110	
FE-12	ROPE GR.	C/P (OPT.)
FE-13	MRL	
FE-14	AMMETER	
FE-15	T-CABLE	Field
FE-16	MOTOR	
FE-17	GOV(CAR)	
FE-18	GOV(CWT)	
FE-19	–	

CAR TOP PART(CTC BOARD, CTX BOARD)

CN_T1

1	UL	7	OND
2	DZ1	8	PH1
3	DZ2	9	PH2
4	DL	10	PH3
5	OAT	11	PH4
6	ONU	12	P24F
		13	N24

CN_T2

1	B220S	4	A220S
2	LITS	5	FE
3	FANS	6	22X

CN_T3

1	UL	5	N24
2	DZ1	6	N24
3	DZ2	7	P24F
4	DL	8	P24F

CC4A

1	ESIN
2	FE
3	GS1

CC4B

1	GS1
2	FE
3	GS2

CC5

1	SAFT
2	FE
3	DFL

CC6

1	SAFT
2	COMP

CC7

1	COMP
2	ESON

CC8

1	ESON
2	GND
3	EXIT

CN_T9

1	CCH
2	CCL

CN_T10

1	XTSP
2	DTSP

CN_T11

1	P24F
2	DFMR
3	DFR1

CN_T12

1	P24F
2	DFMR
3	DFR1

CN_T13

1	DFL
2	EXIT
3	ESIN
4	GS2
5	SAFT

CN_T14

1	P24F
2	CCH
3	CCL
4	N24

CC16 C2

1	A220S
2	B220S

CN_T17

1	22Y
2	FE
3	FAN

CN_T18

1	22Y
2	FE
3	LIT

CN_T19

1	N24
2	DOB
3	DCB

CN_T20

1	P24F
2	ONS
3	OAT

CN_T21

1	ONS
2	ONU
3	OND

CN_T22

1	22X
2	FE
3	22Y

CC23

1	P24F
2	N24

CC23B

1	P24F
2	N24

CC24

1	EE1
2	EE2
3	FE

CC24B

1	P24F
2	EE1
3	FE

CC25

1	SE1
2	FE
3	SE2

CN_T30

1	A220
2	B220
3	A220S
4	B220S

CN_T25B

1	N24
2	FE
3	SE1

CC25B

1	N24
2	FE
3	SE1

CN_T31

1	BGM
2	SKP2

CN4

1	5V	5	BP
2	GND_EN	6	BN
3	AP	7	
4	AN	8	

CN7

1	P24F
2	N24
3	OPL

CN8

1	P24F
2	N24
3	CLL

CC11

1	BGM
2	SKP2
3	FE

CN12

1	DR_U
2	
3	DR_V
4	
5	DR_W

CC28

1	EL1
2	EL2

CC28B

1	EL1
2	EL2

OPB & PIT PART

CN_C2

1	ATT	7	ODD
2	ATTU	8	EACH
3	ATTD	9	CKI
4	PASS	10	PS
5	MOVE	11	DFD_02
6	EVN		

CN_B1

1	CCH	12	OND
2	CCL	13	PH1
3	UL	14	PH2
4	DZ1	15	P24F
5	DL	16	N24
6	DFL	17	A220
7	ESIN	18	B220
8	GS2	19	22X
9	SAFT	20	22Y
10	ATC	21	DZ2
11	ONU		

CN_C1

1	P24F
2	CCH
3	CCL
4	N24

CN_C3

1	N24
2	XL30
3	XL70
4	XL100
5	XL110

CN_C5

1	SPK1
2	SPK2
3	–

CN_C6

1	P24F
2	LIN
3	P12
4	N24

CN_C7

1	P24F
2	LIN
3	P12
4	N24

CN_C8

1	P24F
2	LIN
3	P12
4	N24

CN_C9

1	FIRE
2	INS
3	DCS
4	FIR2
5	DCSP1

CN_SP(8P)

1	PH3
2	PH4

CN_C10

1	P24F
2	CCH
3	CCL
4	N24

CN_C11

1	PH4
2	PH3

CN_W1

1	P24F
2	LIN
3	P12
4	N24

CN_W2

1	P24F
2	UPLT

CN_W3

1	P24F
2	DNLT

CN_P1

1	UFL
2	DFL
3	DLS
4	PLDL
5	PLDM
6	PLDH
7	N24
8	PE
9	P24
10	N24
11	CCS
12	N24
13	INTL
14	ESTOP
15	BUFF
16	PE
17	–
18	–
19	22X
20	22Y
21	–

THIS DRAWING IS PROPRIETARY TO HELCO
NO PART OF THIS DRAWING MAY BE REPRODUCED
WITHOUT THE PERMISSION OF HELCO
허가없이 복사할 수 없음

배 부 처

CHANGE 개 정 란

A	A1 COMPLETELY REVISED	2013. 04. 17 진 호 연
B	B1 ADDED TBMA-4 BKBS B2 ADDED FE-14 SPEC. B3 WAS BGM1, BGM2	2013. 04. 23 진 호 연
C	C1 MOVED FROM B9 C2 WAS CN_T16 C3 CN_A4,5 REVISED C4 WAS NOT ON CN_16-1,6,9	2013. 05. 07 진 호 연
D	D1 ADDED CN_X1-2 SIGNAL	2013. 05. 13 진 호 연

TOLERANCES-UNLESS OTHERWISE SPECIFIED

SIZE OVER	TO INCL.	TURN. PNCH'G DIST.OF HOLE STR.	MLDG. DIE CSTG. PRCN.CSTG DRAW.	SH.MET WELD GAS CTG.	CSTG. FORG.
1	4	± 0.1	± 0.2	± 0.3	± 0.5
4	16	± 0.2	± 0.3	± 0.5	± 0.7
16	63	± 0.3	± 0.4	± 0.7	± 0.9
63	250	± 0.4	± 0.6	± 1.2	± 1.3
250	500	± 0.6	± 0.8	± 1.5	± 1.8
500	1000	± 0.8	± 1.0	± 2.0	± 2.5
1000	2000	± 1.1	± 1.5	± 2.5	± 3.3
ANGLE		± 0.25°	± 0.5°	± 1.0°	± 2.0°

HYUNDAI ELEVATOR CO., LTD.

	DRWN BY 제 도	DSND BY 설 계	CHKD BY 검 토	APPD BY 승 인
표 준 / 임 시 / 보 류	진 호 연		김주찬	심영석
	2012.	12. 03	01/31	01/31

UNIT 단위	MM	APPAR.	WBST1 & WBLX1 & WBSS1
SCALE 척도	N/S	TITLE 제 목	ELEM.W.DIAGRAM
3RD ANGLE 3 각 법			
REF. NO 참고도면		DWG. NO 도면번호	HE000529 1/1

ELCON · elcon.im

COL. 30 (SIGNAL TABLE)

OPTION PART

TBRG(+GRIP BK)

1	A11R
2	B11R
3	–
4	RBKI
5	N24
6	FE

TBTH(+THER)

1	220XT
2	220Y
3	–
4	–

TBOB(+OB)

1	OBS
2	22XO
3	22XO
4	22YO
5	22YO
6	–

TBRG(+ELTECH BK)

1	N24
2	RBKI
3	N24R
4	N24
5	FE
6	P24

TBEL(+ELD)

1	P24
2	ELDO
3	ELDI
4	N24

TBTS(+ATS)

1	P24
2	EMPP
3	EMPA
4	EMPR
5	EMPS
6	N24

TBRG(+SAFE-TECH BK)

1	N24
2	RBKI
3	B220
4	A220
5	B220
6	B220R

TBMD(+CAR BK)

1	N24
2	RBKI
3	RBK
4	–
5	P24
6	–

FUSE & CABLE SPEC.

*FUSE TABLE

NAME	SPEC.	LOCATION	APPLICATION	NOTE
F1	3A, 250V	CP	P24(TC)	
F2	3A, 250V	SAF B'd	SAFETY	
F3	5A, 250V	VCON B'd	BRAKE PW.	
F4	5A, 250V	CP	BUILDING	
F5	3A, 250V	PIT	MRL LAMP	
F6	10A, 250V	CAR TOP	DOOR PW	
F7	5A, 250V	CAR TOP	CTC 22Y	
F8	8A, 250V	CP	MRL P24	
F9	8A, 250V	CP	MRL N24	
F10	3A/5A, 250V	CP	ROPE BK	
F11	3A/5A, 250V	CP	ROPE BK	
F12	1A, 500V	CP	PILOT LAMP	

*CABLE COLOR, SPEC. TABLE

SIGNAL	COLOR	SPEC.	NOTE
A220, 22X	BLACK	1.5SQ	INCLUDE SIGNAL
B220, 22Y	WHITE	1.5SQ	INCLUDE SIGNAL
P180, P160	RED	1.5SQ	INCLUDE SIGNAL
N180, N160	BLUE	1.5SQ	INCLUDE SIGNAL
P110	BROWN	0.5SQ	INCLUDE SIGNAL
N110	YELLOW	0.5SQ	INCLUDE SIGNAL
P24	RED	0.5SQ	INCLUDE SIGNAL
N24	BLUE	0.5SQ	INCLUDE SIGNAL
GROUND	GREEN/Y	1.5SQ, (etc)	–
GROUND	GREEN/Y	6SQ (FLT1, 써지)	–
GROUND	GREEN/Y	10SQ (INV)	–

A1

INV	LUG	POWER CABLE SPEC.	GROUND CABLE SPEC.
5.5kW, 7.5kW	4 X 6R	UL1015#12 (3.31SQ)	UL1283#8 (8.36SQ)
11kW	6 X 6R	UL1015#10 (5.26SQ)	UL1283#8 (8.36SQ)
15kW	10 X 6R	UL1283#8 (8.36SQ)	UL1283#8 (8.36SQ)
22kW	16 X 8R	UL1283#6 (13.3SQ)	UL1283#4 (21.1SQ)
30kW	25 X 8R	UL1283#4 (21.1SQ)	UL1283#4 (21.1SQ)

*GROUD CABLE COLOR : GREEN/YELLOW

ELCON

THIS DRAWING IS PROPRIETARY TO HELCO
NO PART OF THIS DRAWING MAY BE REPRODUCED
WITHOUT THE PERMISSION OF HELCO
허가없이 복사할 수 없음

배부처

CHANGE 개정란

A1	ADDED P160, N160	2013. 05. 03 진 호 연

TOLERANCES-UNLESS OTHERWISE SPECIFIED

SIZE OVER	TO INCL.	TURN. PNCH'G DIST.OF HOLE STR.	MLDG. DIE CSTG. PRCN.CSTG DRAW.	SH.MET WELD GAS CTG.	CSTG. FORG.
1	4	± 0.1	± 0.2	± 0.3	± 0.5
4	16	± 0.2	± 0.3	± 0.5	± 0.7
16	63	± 0.3	± 0.4	± 0.7	± 0.9
63	250	± 0.4	± 0.6	± 1.2	± 1.3
250	500	± 0.6	± 0.8	± 1.5	± 1.8
500	1000	± 0.8	± 1.0	± 2.0	± 2.5
1000	2000	± 1.1	± 1.5	± 2.5	± 3.3
ANGLE		± 0.25°	± 0.5°	± 1.0°	± 2.0°

HYUNDAI ELEVATOR CO., LTD.

표 준 / 임 시 / 보 류	DRWN BY 제 도	DSND BY 설 계	CHKD BY 검 토	APPD BY 승 인
	진 호 연		김주찬	심영석
	2012. 12. 03		01/31	01/31

UNIT 단위	MM
SCALE 척도	N/S
3RD ANGLE 3 각 법	
REF. NO 참고도면	
APPAR.	WBST1 & WBLX1 & WBSS1
TITLE 제 목	ELEM.W.DIAGRAM
DWG. NO 도면번호	HE000530 1/1

HDW-91-003A A3 (420mmx297MM)

ELCON · elcon.im